| |
|---|
| P-15110 |
| S4699 |
| 26925 |

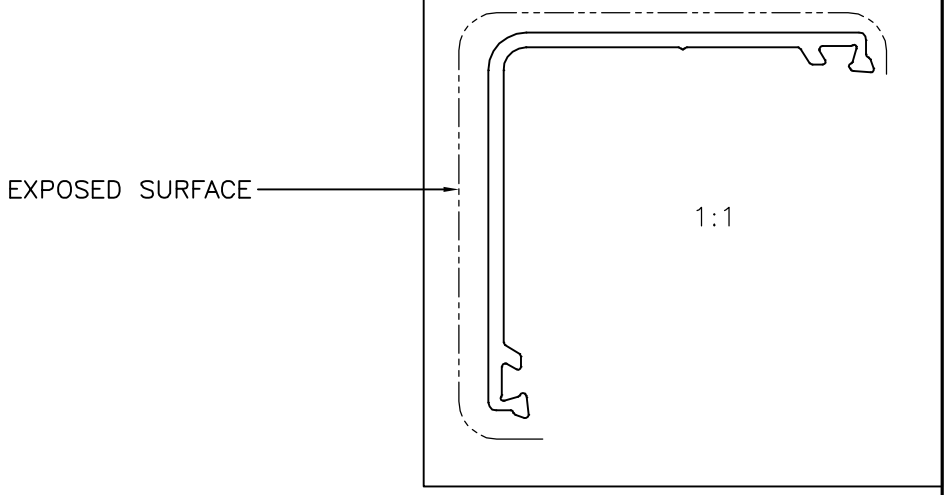


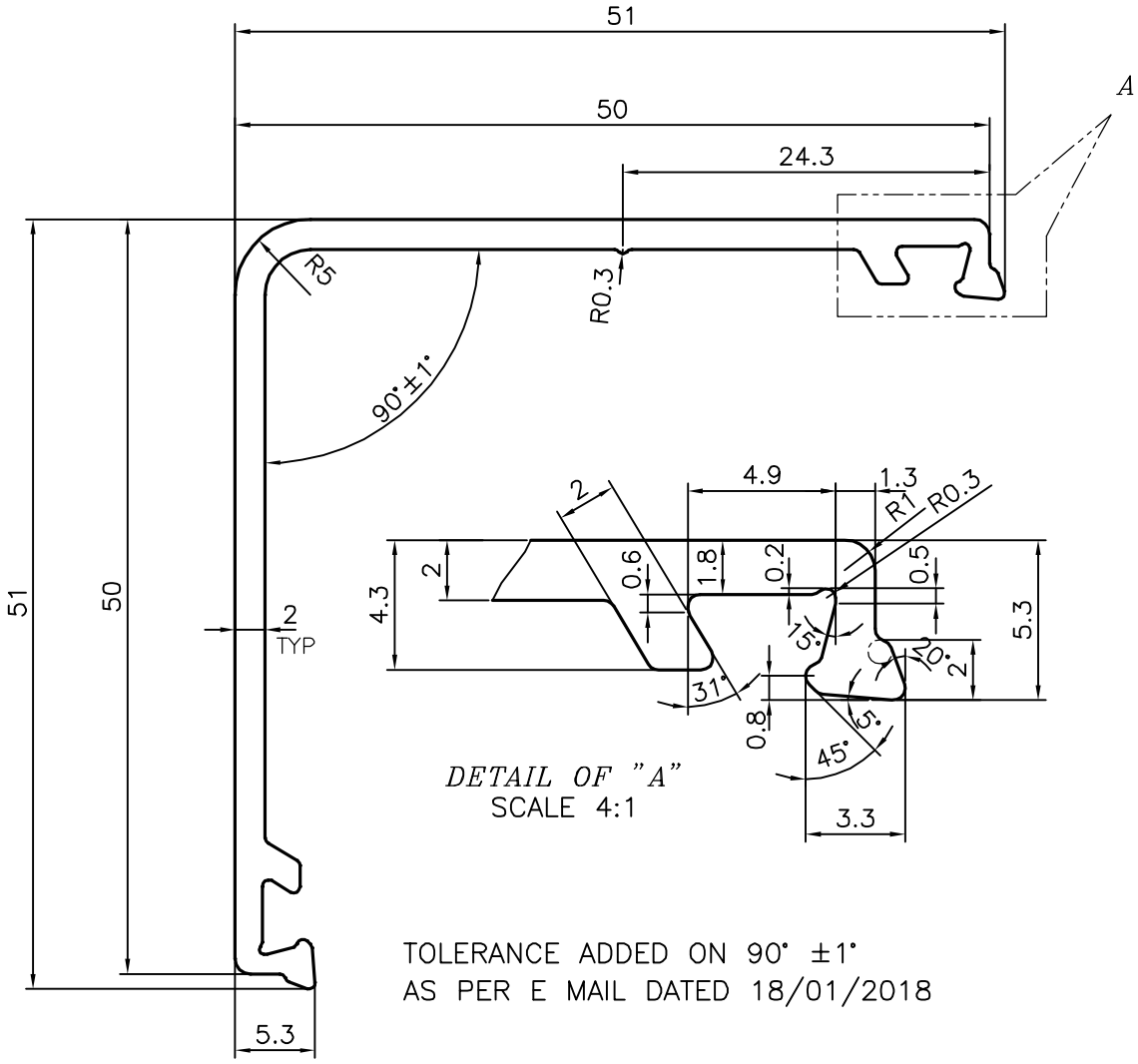


TOLERANCE ADDED ON 90° ±1°
AS PER E MAIL DATED 18/01/2018

| | | | | |
|---|---|---|---|---|
| SYMBOL OF QUALITY AN ISO 9001 COMPANY | **JINDAL ALUMINIUM LTD.** *BANGALORE-560073 (INDIA)* | | NAME | DATE |
| | | DRAWN | J.P.KAUSHIK | 01-09-2015 |
| | | CHECKED | | |
| | | APPROVED | S.S.GARG | 03-10-2015 |
| 1. ALL DIMENSIONS ARE IN mm. 2. ROUND OFF ALL SHARP CORNERS WITH 0.40 mm. 3. TOLERANCES WILL BE AS PER IS:3965-1981, UNLESS OTHERWISE SPECIFIED | | SCALE | | 2:1 |
| | | AREA $mm^2$ | | 215.033 |
| | | PERIMETER mm. | | 222.602 |
| | | WEIGHT kg/m | | 0.581 |
| PARTY'S NAME | VIVANT SOLUTION PVT. LTD., CHENNAI | DRAWING No. | | SECTION No. |
| PARTY'S DRAWING No. | AS PER DRAWING-CDR-9003990 | P-15110 | | – |
| ALLOY & TEMPER | HE9 WP | S4699 | | S4699 |
| | | 26925 | | 26925 |
| DESCRIPTION | AIR GRILL SECTION | | | |