P-13373
X1728
26928

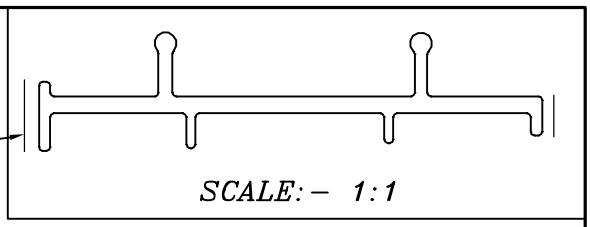

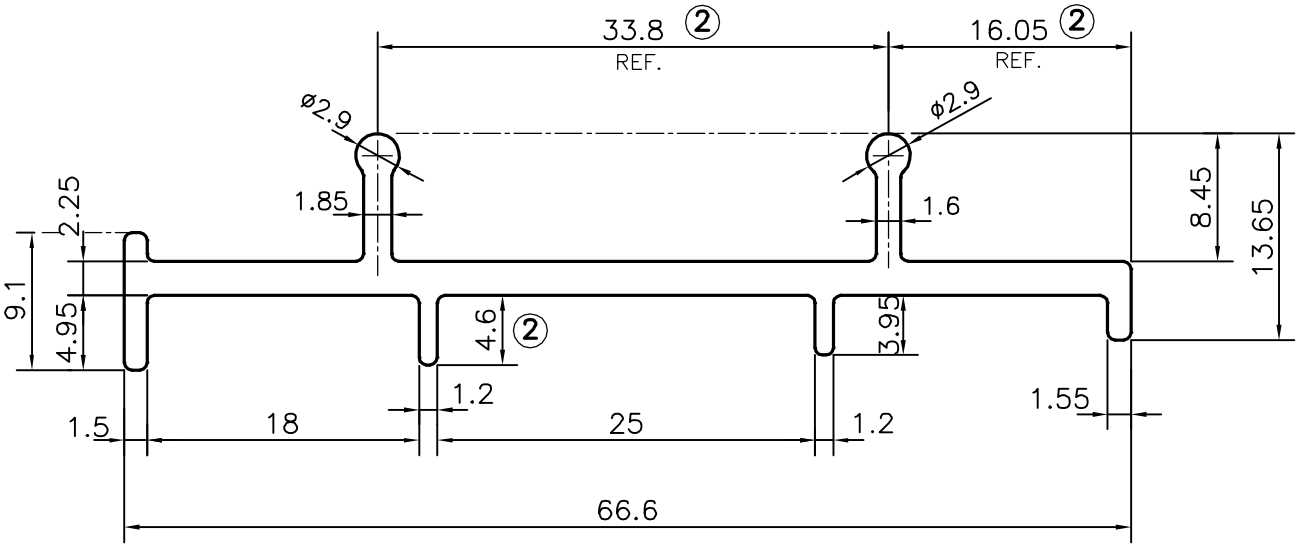

ISSUE-2

☞ *DIMENSION CHANGED FROM :-*

19.3 TO 16.05 mm.
27.4 TO 33.80 mm.
4.65 TO 4.60 mm.

TOLERANCES ON OVERALL WIDTHS & WIDTHS ACROSS FLATS OF BARS, & REGULAR SECTIONS

UPTO 6.40mm - ±0.20	UPTO 32.0mm - ±0.38	UPTO 120.0mm - ±0.85	1. STRAIGHTNESS=1.7mm/M
UPTO 10.0mm - ±0.23	UPTO 50.0mm - ±0.46	UPTO 160.0mm - ±1.02	2. TWIST=1.7mm/M
UPTO 12.0mm - ±0.25	UPTO 60.0mm - ±0.53	UPTO 200.0mm - ±1.14	3. ANGULARITY= ±2°
UPTO 16.0mm - ±0.28	UPTO 80.0mm - ±0.69	UPTO 250.0mm - ±1.40	4. FLATNESS =0.007xWIDTH
UPTO 25.0mm - ±0.30	UPTO 100.0mm - ±0.75	UPTO 300.0mm - ±1.65	

JINDAL
SYMBOL OF QUALITY
AN ISO 9001 COMPANY

JINDAL ALUMINIUM LTD.

BANGALORE-560073 (INDIA)

	NAME	DATE
DRAWN	*PARVESH*	08-02-2014
CHECKED		
APPROVED	S.S.GARG	10-02-2014

1. ALL DIMENSIONS ARE IN mm.
2. ROUND OFF ALL SHARP CORNERS WITH 0.50 mm.
3. TOLERANCES WILL BE AS PER IS:3965-1981 , UNLESS OTHERWISE SPECIFIED

SCALE	2:1
AREA mm^2	207.661
PERIMETER mm.	203.981
WEIGHT kg/m	0.561

PARTY'S NAME	WILLIAMS REFREGERATION, BANGALORE
PARTY'S DRAWING No.	AS PER AUTOCAD DRAWING
ALLOY & TEMPER	6063 T6
DESCRIPTION	REFRIGERATION SECTION

DRAWING No.	SECTION No.
P-13373	-
X1728	X1728(ISSUE-2)
26928	26928