P-8832-3
X1079
26935

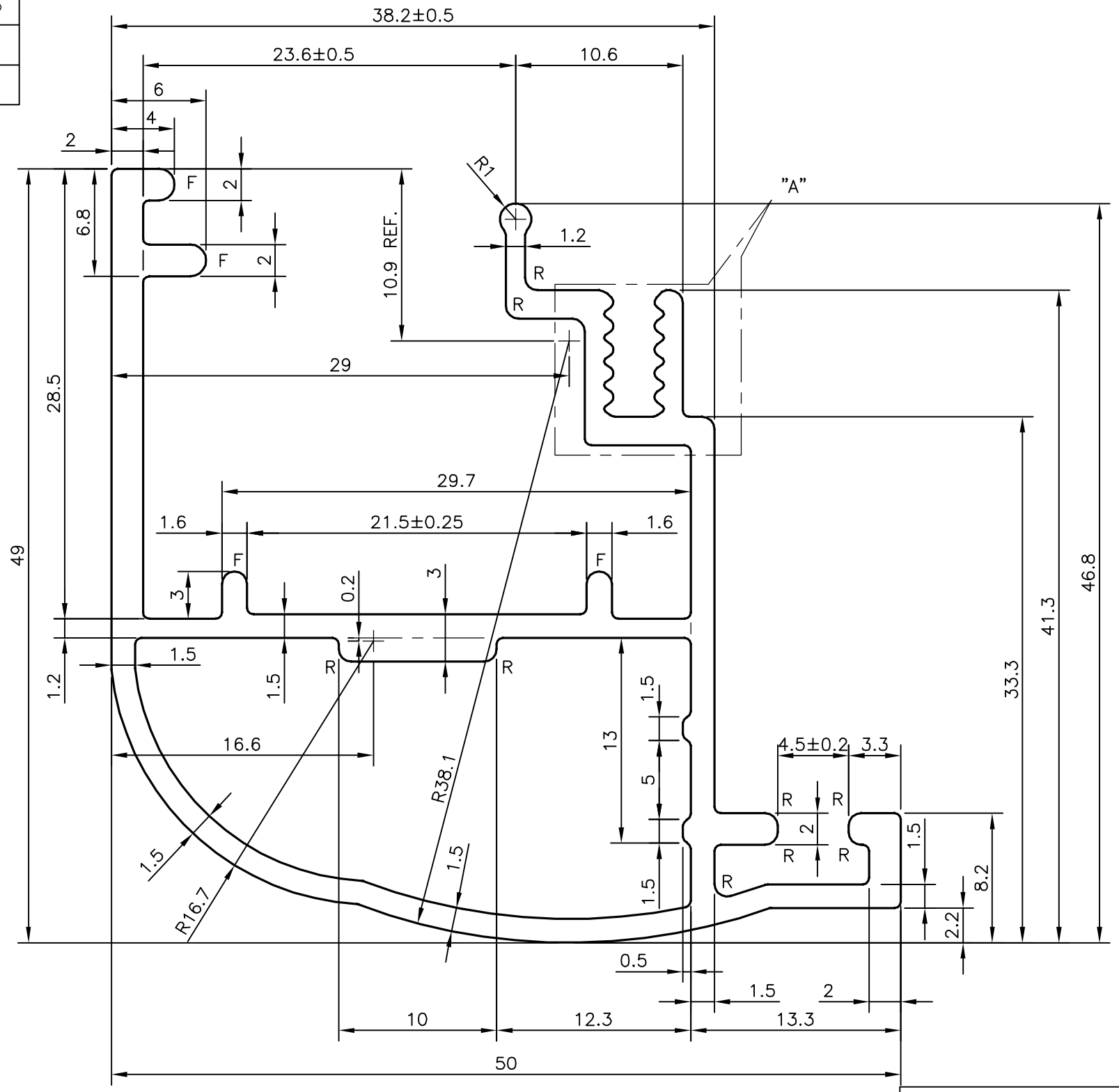

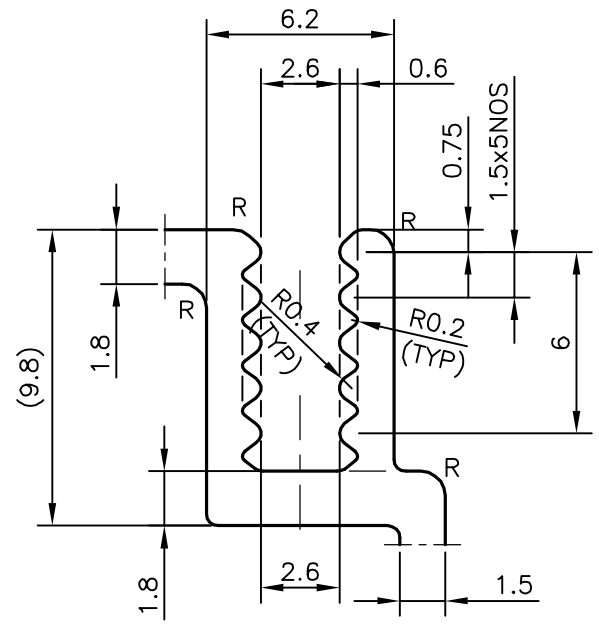

R = R0.80 mm (13 PLACES)
F = FULL RADIUS (4 PLACES)

AND MATCH WITH YOUR MATCHING COMPONENT

PLEASE SPECIFY THE EXPOSED SURFACE IN THE DRAWING WHEREVER BETTER FINISH REQUIRED.

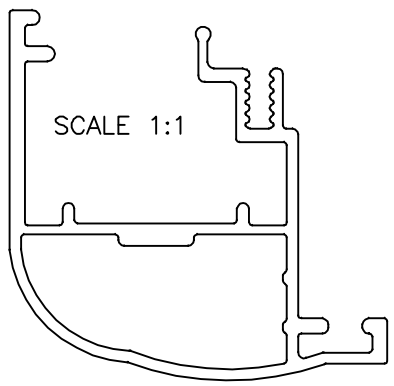

JINDAL
SYMBOL OF QUALITY
AN ISO 9001 COMPANY

JINDAL ALUMINIUM LTD.
BANGALORE-560073 (INDIA)

1. ALL DIMENSIONS ARE IN mm.
2. ROUND OFF ALL SHARP CORNERS WITH 0.40 mm.
3. TOLERANCES WILL BE AS PER IS:6477-1983 UNLESS OTHERWISE SPECIFIED

		NAME	DATE
DRAWN		PRASANNA.H	07-02-2009
CHECKED			
APPROVED			
SCALE			3:1
AREA mm^2			351.507
PERIMETER mm.			317.588
WEIGHT kg/m			0.949
PARTY'S NAME	INDO-WESTERN REFRIGERATION PVT. LTD., SHAHAPUR	DRAWING No.	SECTION No.
PARTY'S DRAWING No.	0300732	P-8832-3	–
ALLOY & TEMPER	HE9 WP	X1079	X1079
DESCRIPTION	65 PROFILE DOOR FRAME SECTION	26935	26935