P-16257
26946

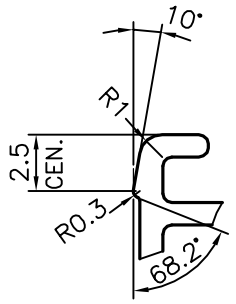

DETAIL OF "A"
SCALE 3:1

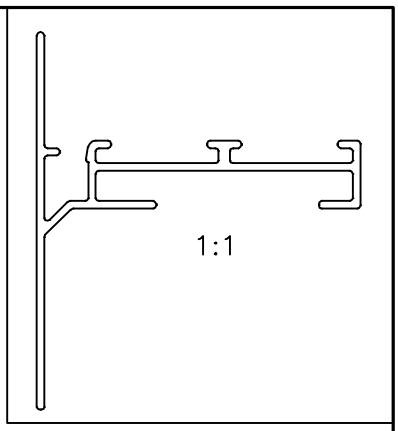

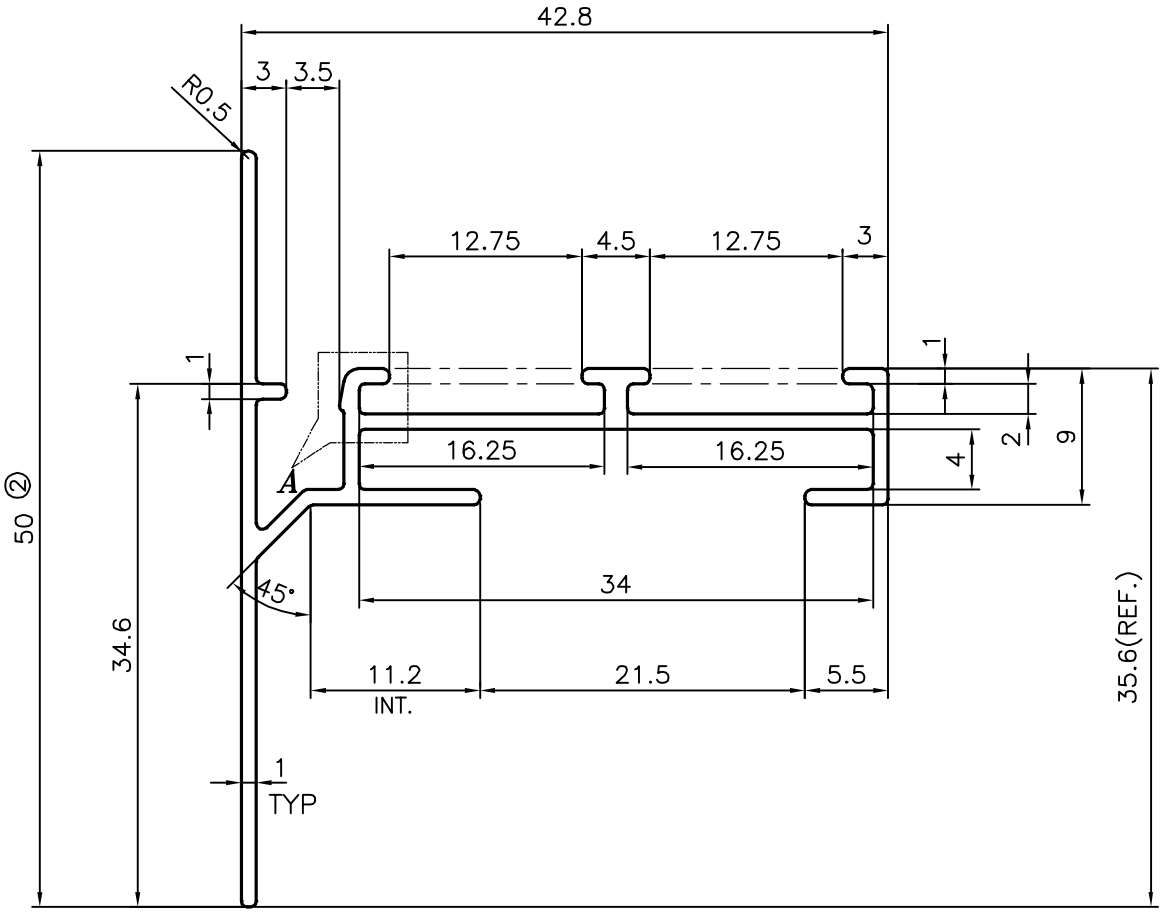

ISSUE-2

DIMENSIONS CHANGED FROM 48 TO 50 mm

WEIGHT ALSO CHANGED FROM 0.360 kg/m TO 0.365 kg/m

JINDAL SYMBOL OF QUALITY AN ISO 9002 COMPANY	*JINDAL ALUMINIUM LTD.* *BANGALORE-560073 (INDIA)*		NAME	DATE
		DRAWN	*J.P.KAUSHIK*	24-10-2016
		CHECKED		
		APPROVED	B.NATARAJ	26-10-2016
1. ALL DIMENSIONS ARE IN mm. 2. ROUND OFF ALL SHARP CORNERS WITH 0.40 mm. 3. TOLERANCES WILL BE AS PER BS:EN-755-9, UNLESS OTHERWISE SPECIFIED		SCALE		2:1
		AREA mm^2		135.341
		PERIMETER mm.		261.614
PARTY'S NAME	KBE INTERNATIONAL SAL, LEBANON MIDDLE EAST	WEIGHT kg/m		0.365
		DRAWING No.		SECTION No.
PARTY'S DRAWING No.	AS PER AutoCAD DRAWING-1464	P-16257		–
ALLOY & TEMPER	6063 T6	26946		26946(ISSUE-2)
DESCRIPTION	AIR GRILL SECTION			