P–16266
26955

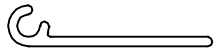

1:1

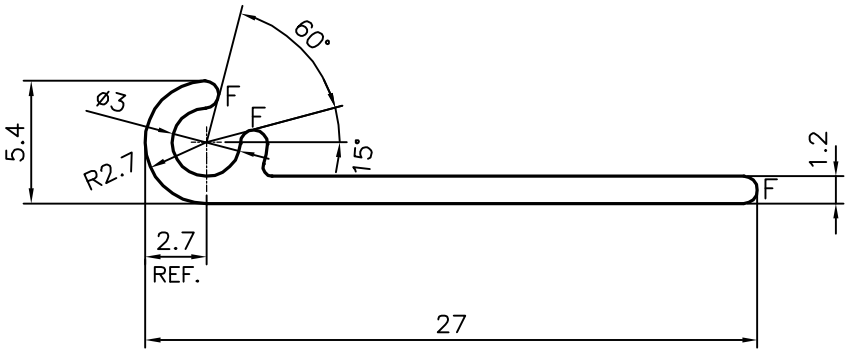

F = FULL RADIUS (3 PLACES)

JINDAL SYMBOL OF QUALITY AN ISO 9002 COMPANY	*JINDAL ALUMINIUM LTD.* *BANGALORE–560073 (INDIA)*		NAME	DATE
		DRAWN	*J.P.KAUSHIK*	25–08–2016
		CHECKED		
		APPROVED	S.S. GARG	08–09–2016
1. ALL DIMENSIONS ARE IN mm. 2. ROUND OFF ALL SHARP CORNERS WITH 0.40 mm. 3. TOLERANCES WILL BE AS PER BS:EN–755–9, UNLESS OTHERWISE SPECIFIED		SCALE		3:1
		AREA mm^2		40.066
		PERIMETER mm.		67.225
		WEIGHT kg/m		0.108
PARTY'S NAME	KBE INTERNATIONAL SAL, LEBANON MIDDLE EAST	DRAWING No.		SECTION No.
PARTY'S DRAWING No.	AS PER AutoCAD DRAWING–1466	P–16266		–
ALLOY & TEMPER	6063 T6	26955		26955
DESCRIPTION	MISC. SECTION			