P−16144
26966

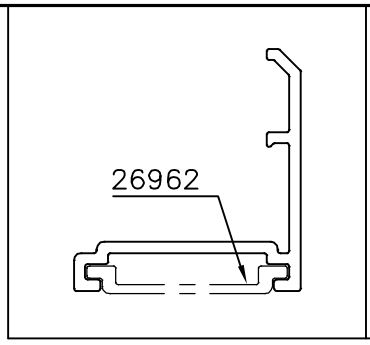

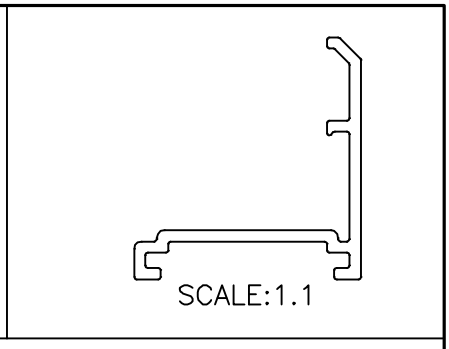

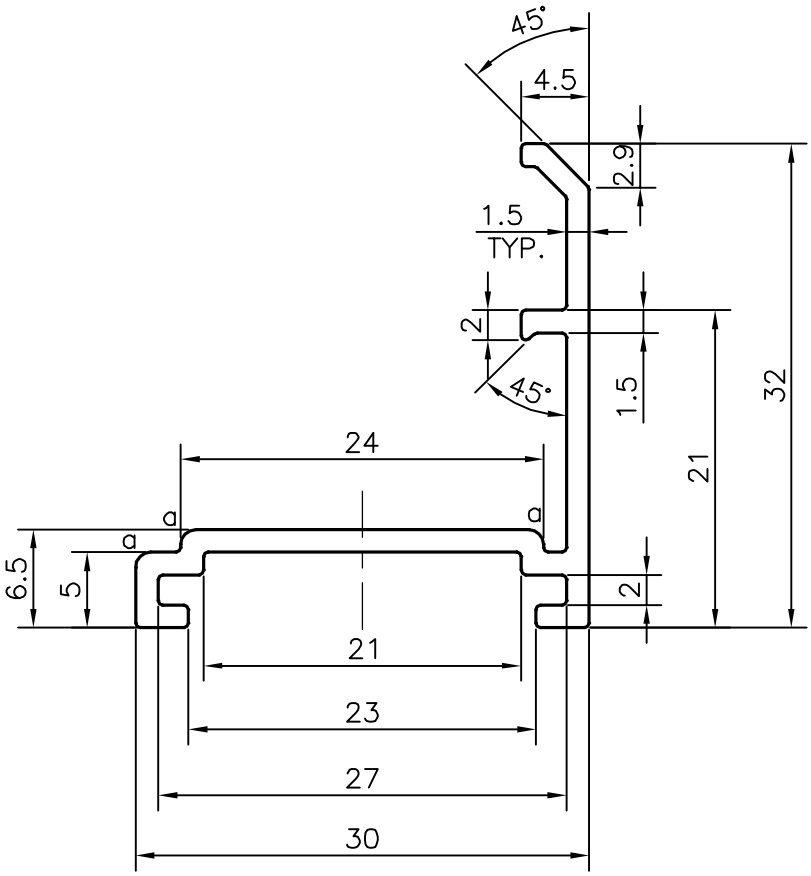

a=RADIUS 1.00 (3 PLACES)

COMMON RADIUS IS 0.30, UNLESS OTHERWISE SPECIFIED

JINDAL SYMBOL OF QUALITY AN ISO 9001 COMPANY	*JINDAL ALUMINIUM LTD.* *BANGALORE−560073 (INDIA)*		NAME	DATE
		DRAWN	KIRAN	02−08−2016
		CHECKED		
		APPROVED	S.S. GARG	23−09−2016
1. ALL DIMENSIONS ARE IN mm. 2. ROUND OFF ALL SHARP CORNERS WITH 0.40 mm. 3. TOLERANCES WILL BE AS PER EN:755/9 , UNLESS OTHERWISE SPECIFIED		SCALE		2:1
		AREA mm^2		113.012
		PERIMETER mm.		150.497
		WEIGHT kg/m		0.305
PARTY'S NAME	DASCO, KUWAIT	DRAWING No.		SECTION No.
PARTY'S DRAWING No.	AS PER DRAWING	P−16144		−
		26966		26966
ALLOY & TEMPER	6063 T6			
DESCRIPTION	OUTER FRAME			