P–16767
26978

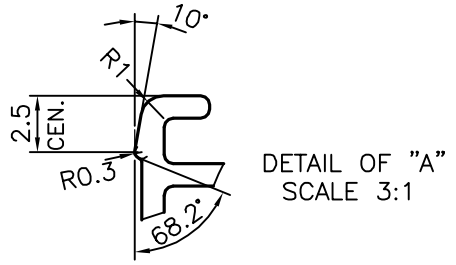

DETAIL OF "A"
SCALE 3:1

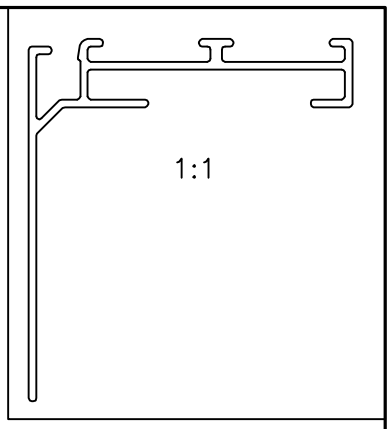

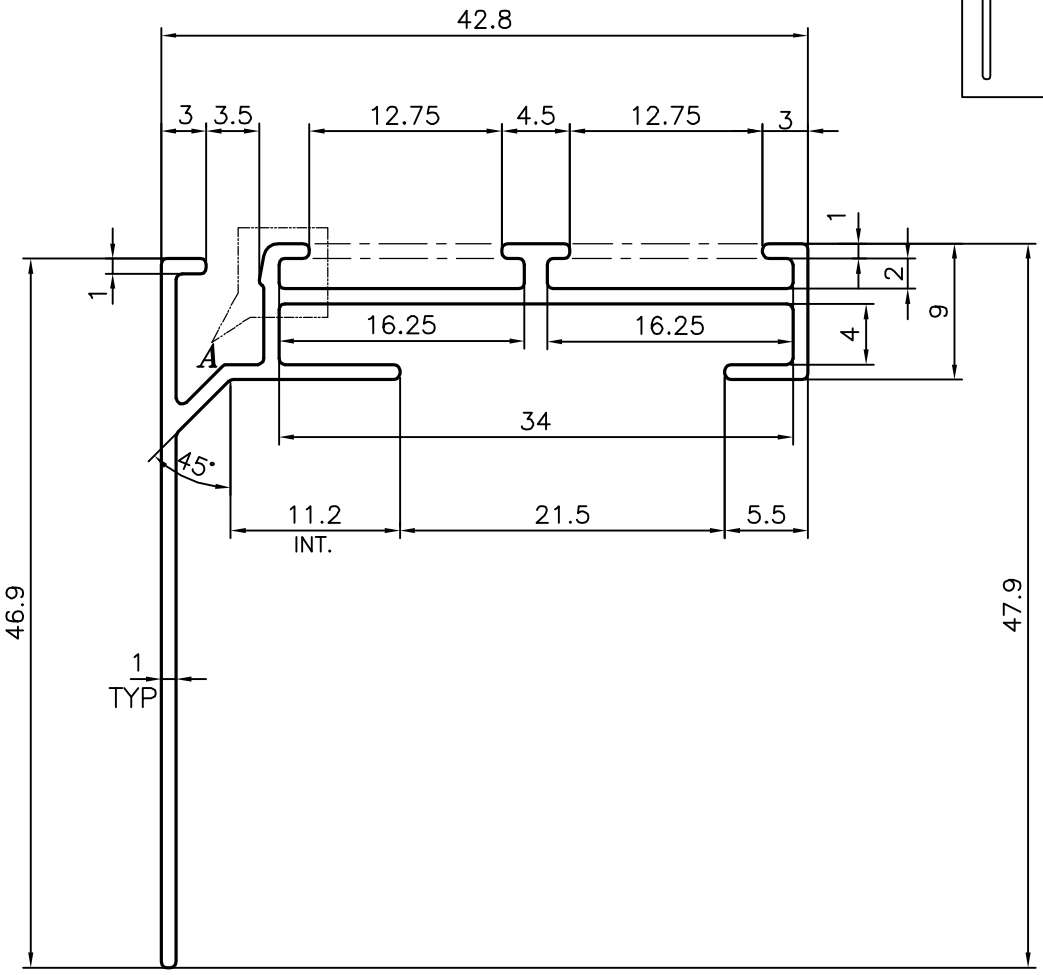

TOLERANCE CHART CD = CIRCUMSCRIBING CIRCLE

CD≤100	100<CD≤200	200<CD<300	300<CD<500
UPTO 10mm – ±0.25	±0.30	±0.35	±0.40
10.0 –25.0 – ±0.30	±0.40	±0.50	±0.60
25.0 –50.0 – ±0.50	±0.60	±0.80	±0.90
50.0 –100.0 – ±0.70	±0.90	±1.10	±1.30
100 – 150 – –	±1.10	±1.30	±1.50
150 – 200 – –	±1.3	±1.50	±1.80
200 – 300 – –	–	±1.70	±2.10
300 – 450 – –	–	–	±2.80

JINDAL
SYMBOL OF QUALITY
AN ISO 9002 COMPANY

JINDAL ALUMINIUM LTD.

BANGALORE–560073 (INDIA)

	NAME	DATE
DRAWN	J.P.KAUSHIK	21–01–2017
CHECKED		
APPROVED	B.NATARAJ	16–03–2017

1. ALL DIMENSIONS ARE IN mm.
2. ROUND OFF ALL SHARP CORNERS WITH 0.40 mm.
3. TOLERANCES WILL BE AS PER BS:EN–755–9, UNLESS OTHERWISE SPECIFIED

SCALE	2:1
AREA mm^2	132.279
PERIMETER mm.	255.843
WEIGHT kg/m	0.357

PARTY'S NAME	KBE INTERNATIONAL SAL, LEBANON MIDDLE EAST
PARTY'S DRAWING No.	AS PER AutoCAD DRAWING–AP–132 (1458)
ALLOY & TEMPER	6063 T6
DESCRIPTION	AIR GRILL SECTION

DRAWING No.	SECTION No.
P–16767	–
26978	26978