P−16708−1
S5277
27132

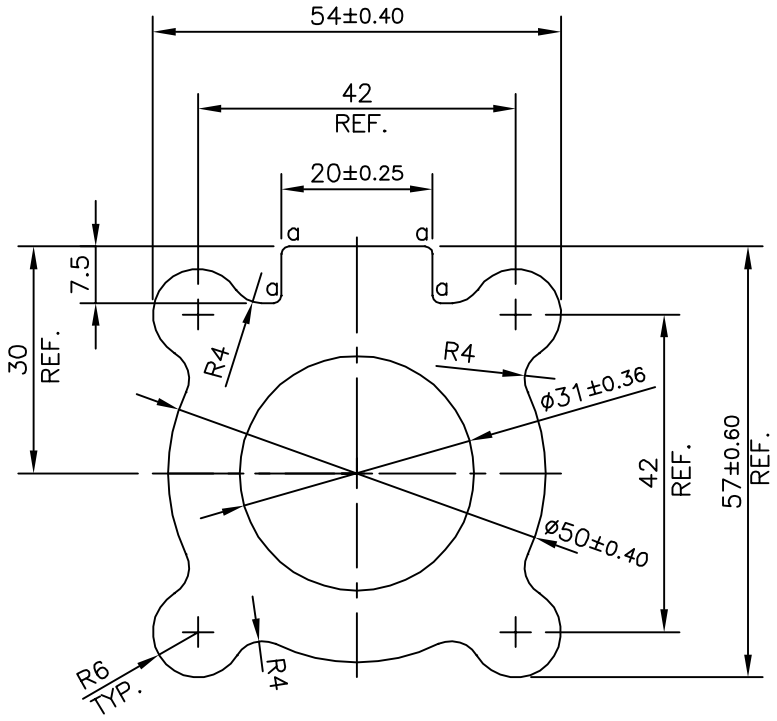

a : RADIUS 1.00 mm (4 PLACES)

TOLERANCES ON OVERALL DIMENSIONS OF HOLLOW SECTIONS

UPTO 20.0mm − ±0.30	UPTO 80.0mm − ±0.70	UPTO 180.0mm − ±1.27	1. STRAIGHTNESS=1.7mm/M
UPTO 30.0mm − ±0.38	UPTO 100.0mm − ±0.80	UPTO 200.0mm − ±1.40	2. TWIST=1.7mm/M
UPTO 40.0mm − ±0.45	UPTO 120.0mm − ±0.90	UPTO 225.0mm − ±1.52	3. ANGULARITY= ±2°
UPTO 50.0mm − ±0.52	UPTO 140.0mm − ±1.00		4. FLATNESS =0.006xWIDTH
UPTO 60.0mm − ±0.60	UPTO 160.0mm − ±1.14		

JINDAL
SYMBOL OF QUALITY
AN ISO 9001 COMPANY

JINDAL ALUMINIUM LTD.
BANGALORE−560073 (INDIA)

	NAME	DATE
DRAWN	KIRAN	09−01−2017
CHECKED		
APPROVED	B.NATARAJ	25−01−2017

1. ALL DIMENSIONS ARE IN mm.
2. ROUND OFF ALL SHARP CORNERS WITH 0.50 mm.
3. TOLERANCES WILL BE AS PER IS:6477−1983, UNLESS OTHERWISE SPECIFIED

SCALE	1:1
AREA mm^2	1790.835
PERIMETER mm.	234.777
WEIGHT kg/m	4.835

PARTY'S NAME	VIJAYA AUTO PRODUCTS., BANGALORE
PARTY'S DRAWING No.	7EXPP0215204 REV. 01
ALLOY & TEMPER	6351 T6
DESCRIPTION	PUMP BODY & MOTOR BODY

DRAWING No.	SECTION No.
P−16708−1	
S5277	S5277
27132	27132