P-4413-1	
S1058	
7175	
27208	

* = 2.0R (2)
$ = 1.0R (8)

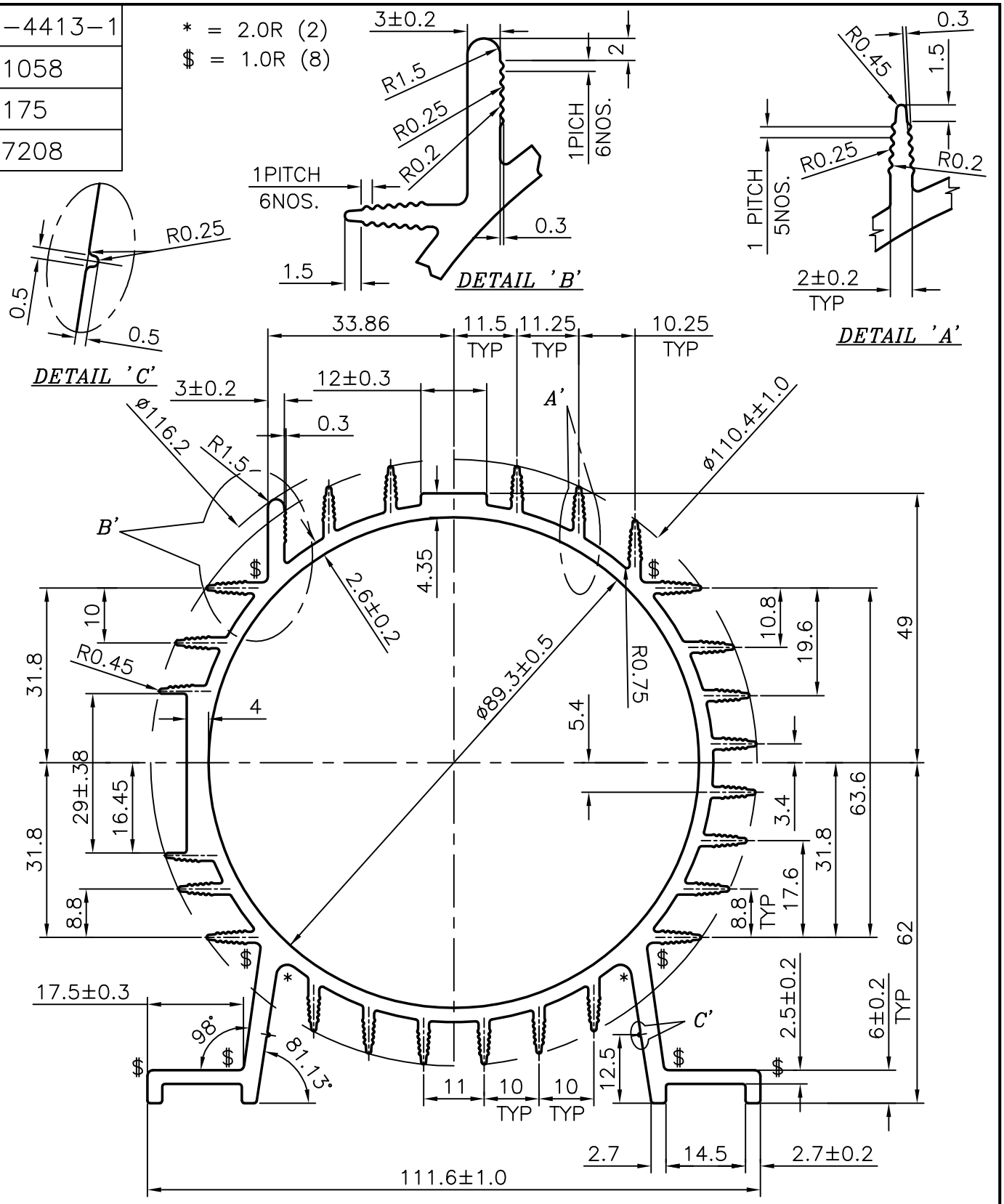

JINDAL
SYMBOL OF QUALITY
AN ISO 9002 COMPANY

JINDAL ALUMINIUM LTD.

BANGALORE-560073 (INDIA)

	NAME	DATE
DRAWN	MALINGAPPA	15-09-03
CHECKED		
APPROVED		

1. ALL DIMENSIONS ARE IN mm.
2. ROUND OFF ALL SHARP CORNERS WITH 0.50 mm.
3. TOLERANCES WILL BE AS PER IS: 6477-1983 UNLESS OTHERWISE SPECIFIED

SCALE	1:1
AREA mm^2	1547
PERIMETER mm.	930.8
WEIGHT kg/m	4.176

PARTY'S NAME	GANGA ENGINEERING CORPORATION, COMBATORE
PARTY'S DRAWING No.	AS PER DRAWING
ALLOY & TEMPER	HE9, WP
DESCRIPTION	MOTOR BODY

DRAWING No.	SECTION No.
P-4413-1	-
S1058	S1058
7175	7175
27208	27208