P−5846−1
27225

ISSUE − ②

V GROOVE ADDED 0.3x90°
AND WEIGHT ALSO CHANGED FROM 3.396 kg/m TO 3.397 kg/m

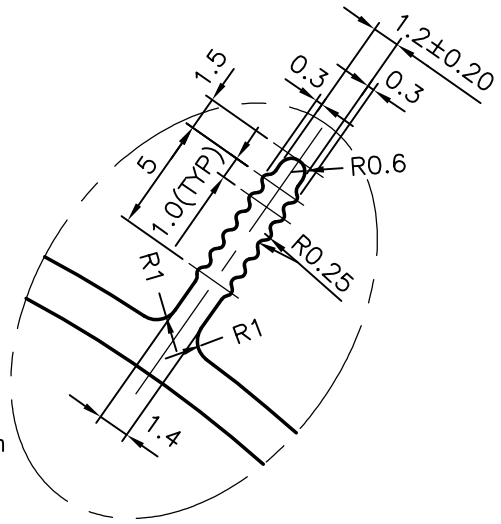

DETAIL−A
SCALE:−3:1

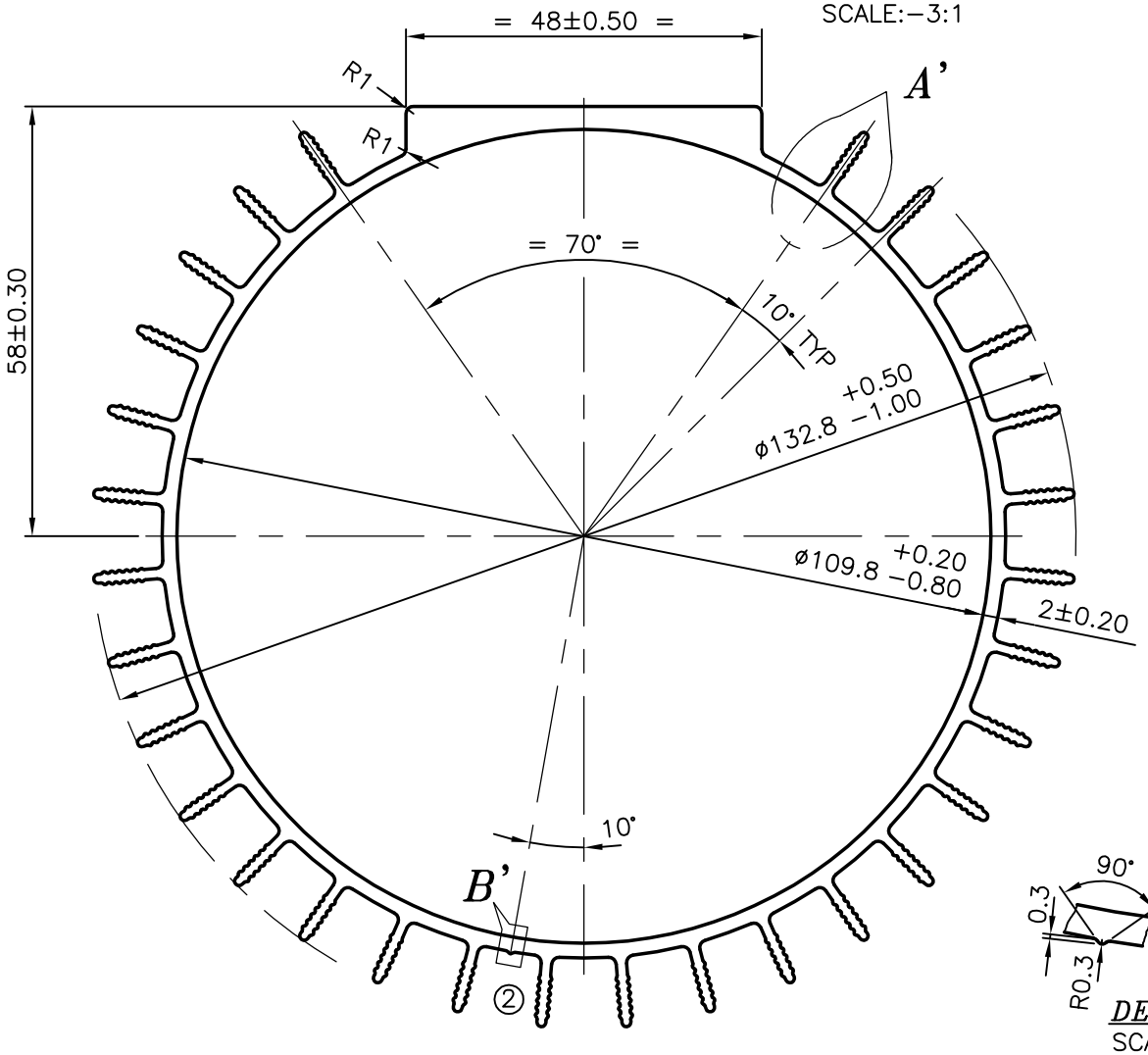

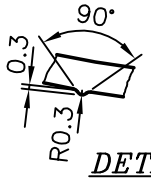

DETAIL−B
SCALE:−2:1

			NAME	DATE
JINDAL SYMBOL OF QUALITY AN ISO 9001 COMPANY	JINDAL ALUMINIUM LTD. BANGALORE−560073 (INDIA)	DRAWN	J.P.KAUSHIK	21−01−2010
		CHECKED		
		APPROVED		
1. ALL DIMENSIONS ARE IN mm. 2. ROUND OFF ALL SHARP CORNERS WITH 0.40 mm. 3. TOLERANCES WILL BE AS PER IS:6477−1983, UNLESS OTHERWISE SPECIFIED		SCALE		1:1
		AREA mm²		1258.067
		PERIMETER mm.		964.571
PARTY'S NAME	GENERAL CATEGORY, COIMBATORE MARKET	WEIGHT kg/m		3.397
		DRAWING No.		SECTION No.
PARTY'S DRAWING No.	AS PER DRAWING	P−5846−1		−
		27225		27225(ISSUE−2)
ALLOY & TEMPER	HE9 WP			
DESCRIPTION	MOTOR BODY			