P−4759−1
S1196
27236

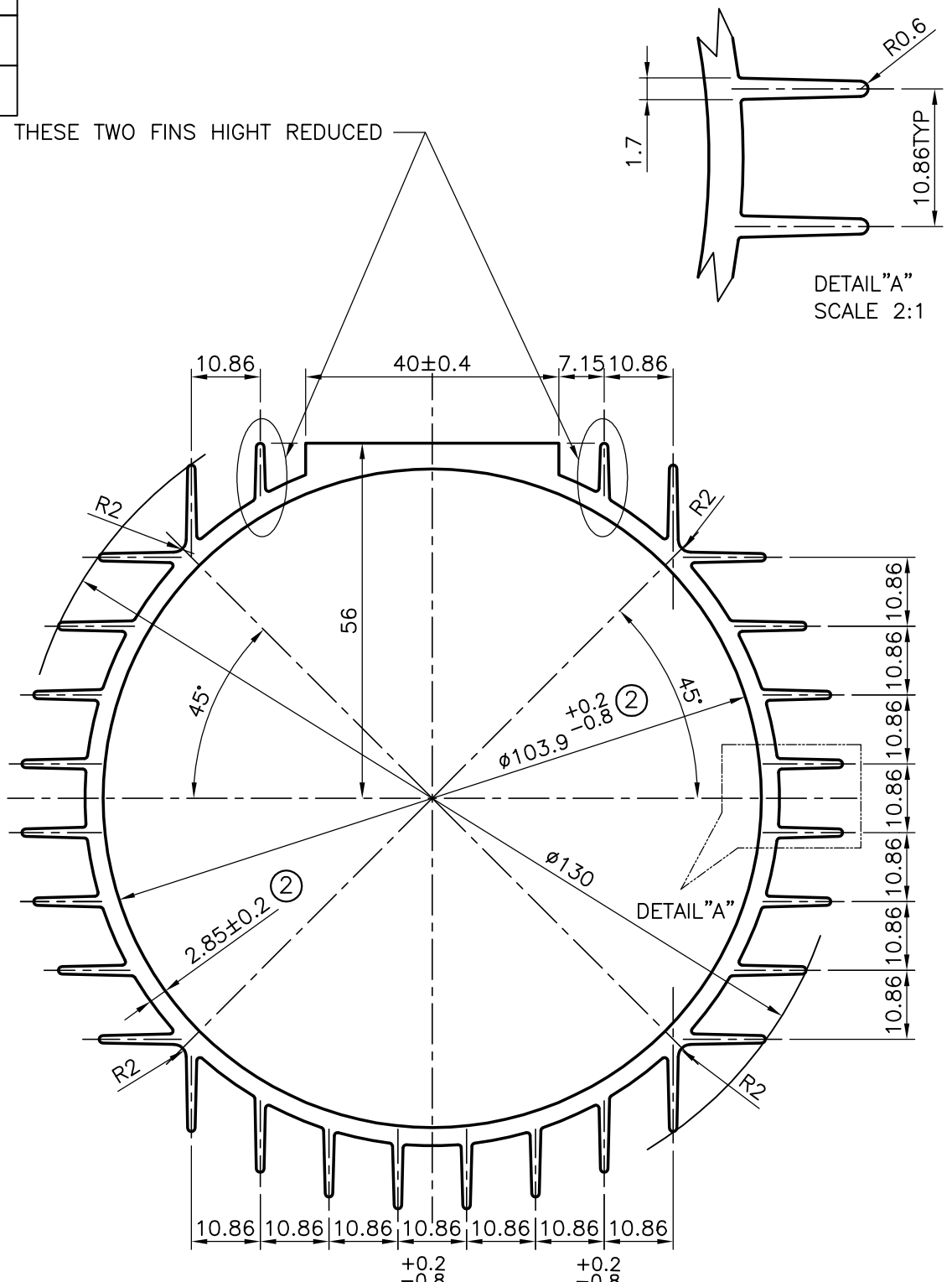

ISSUE:−2

DIMENSIONS CHANGED FROM ø104.4 $^{+0.2}_{-0.8}$ TO ø103.9 $^{+0.2}_{-0.8}$
THICKNESS 2.6±0.20 TO 2.85±0.20.
WEIGHT ALSO CHANGED FROM 3.878 kg/M TO 4.076 kg/M

			NAME	DATE
JINDAL SYMBOL OF QUALITY AN ISO 9002 COMPANY	*JINDAL ALUMINIUM LTD.* *BANGALORE−560073 (INDIA)*	DRAWN	J.P.KAUSHIK	03−09−2012
		CHECKED		
		APPROVED	*S.S.GARG*	15−09−2012

1. ALL DIMENSIONS ARE IN mm.
2. ROUND OFF ALL SHARP CORNERS WITH 0.40 mm.
3. TOLERANCES WILL BE AS PER IS:6477−1983 UNLESS OTHERWISE SPECIFIED

SCALE	1:1
AREA mm²	1509.65
PERIMETER mm.	925.376
WEIGHT kg/m	4.076

PARTY'S NAME	GANGA ENGG CORPORATION ,. COIMBATORE
PARTY'S DRAWING No.	AS PER SKETCH & AS PER REQUIREMENT
ALLOY & TEMPER	HE9 WP
DESCRIPTION	MOTOR BODY

DRAWING No.	SECTION No.
P−4759−1	−
S1196	S1196
27236	27236(ISSUE−2)