P-10482-3	
27255	

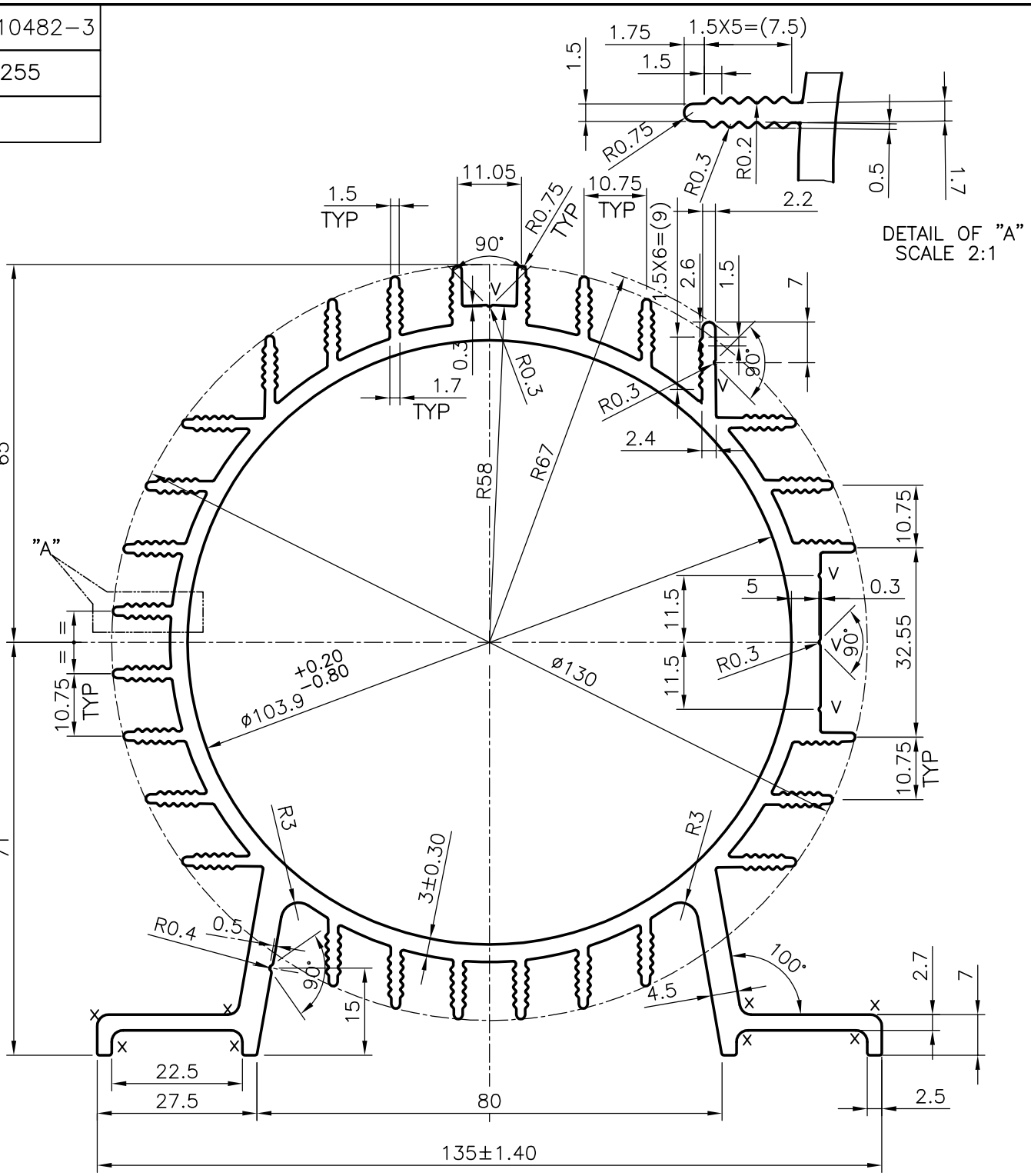

V = V GROOVE 0.3x90° (5 PLACES)
x = 2.0 RADIUS (8 PLACES)

			NAME	DATE
JINDAL SYMBOL OF QUALITY AN ISO 9001 COMPANY	*JINDAL ALUMINIUM LTD.* *BANGALORE-560073 (INDIA)*	DRAWN	J.P.KAUSHIK	26-10-2010
		CHECKED		
		APPROVED	S.S.GARG	30-10-2010

1. ALL DIMENSIONS ARE IN mm.
2. ROUND OFF ALL SHARP CORNERS WITH 0.40 mm.
3. TOLERANCES WILL BE AS PER IS:6477-1983 UNLESS OTHERWISE SPECIFIED

SCALE	1:1
AREA mm^2	2156.379
PERIMETER mm.	1218.816
WEIGHT kg/m	5.822

PARTY'S NAME	GENERAL CATEGORY., COIMBATORE MARKET
PARTY'S DRAWING No.	AS PER DRAWING
ALLOY & TEMPER	HE9 WP
DESCRIPTION	PUMP BODY

DRAWING No.	SECTION No.
P-10482-3	–
27255	27255