P−13860−2
27274

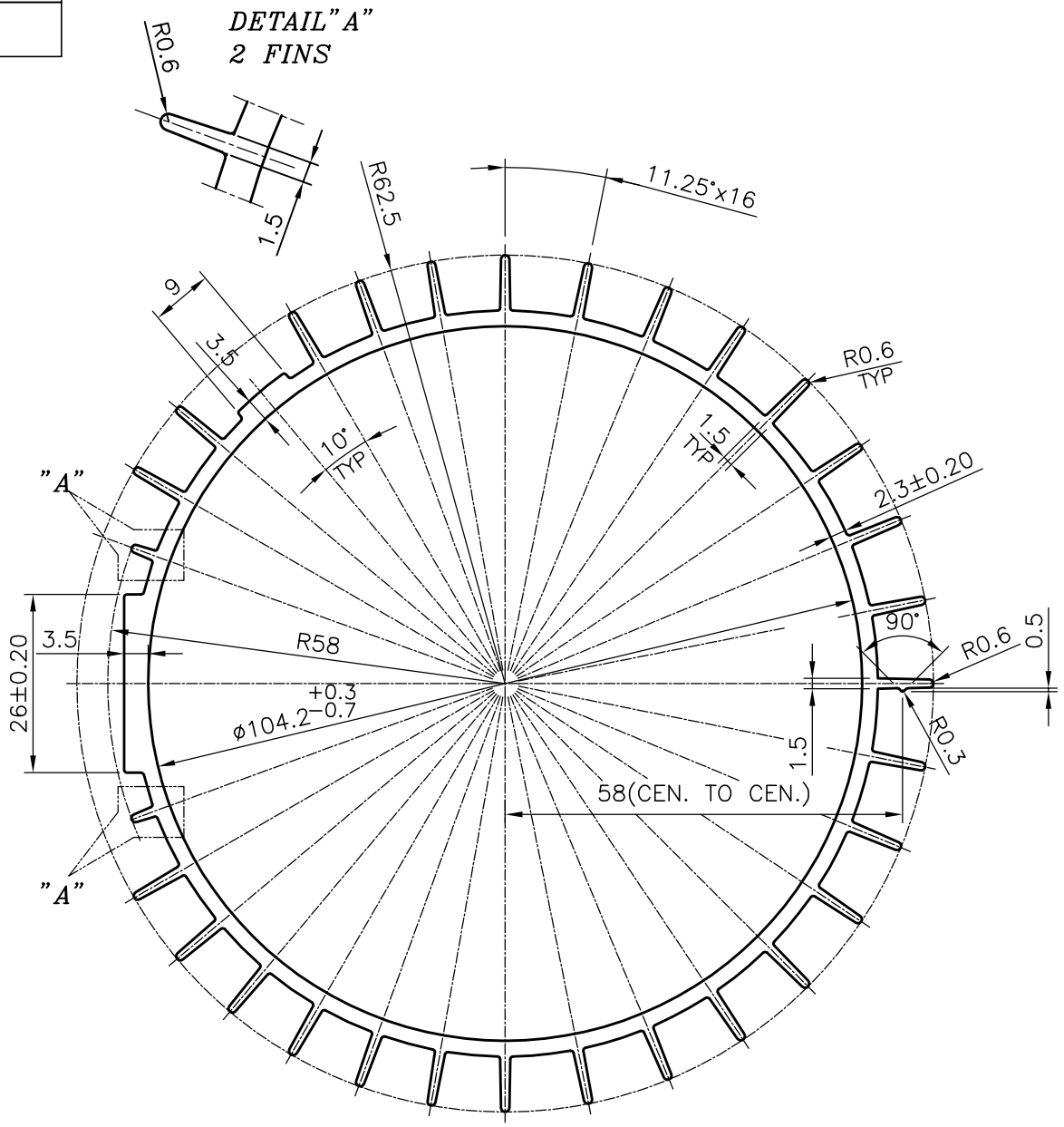

JINDAL SYMBOL OF QUALITY AN ISO 9002 COMPANY	JINDAL ALUMINIUM LTD. BANGALORE−560073 (INDIA)		NAME	DATE
		DRAWN	J.P.KAUSHIK	20−08−2014
		CHECKED		
		APPROVED	S.S.GARG	22−08−2014
1. ALL DIMENSIONS ARE IN mm. 2. ROUND OFF ALL SHARP CORNERS WITH 0.40 mm. 3. TOLERANCES WILL BE AS PER IS:6477−1983 UNLESS OTHERWISE SPECIFIED		SCALE		1:1
		AREA mm^2		1135.93
		PERIMETER mm.		783.642
PARTY'S NAME	GENERAL CATEGORY, COIMBATORE MARKET	WEIGHT kg/m		3.067
		DRAWING No.		SECTION No.
PARTY'S DRAWING No.	AS PER SAMPLE	P−13860−2		−
		27274		27274
ALLOY & TEMPER	HE9 WP			
DESCRIPTION	MOTOR BODY			