P−20030−2
27290

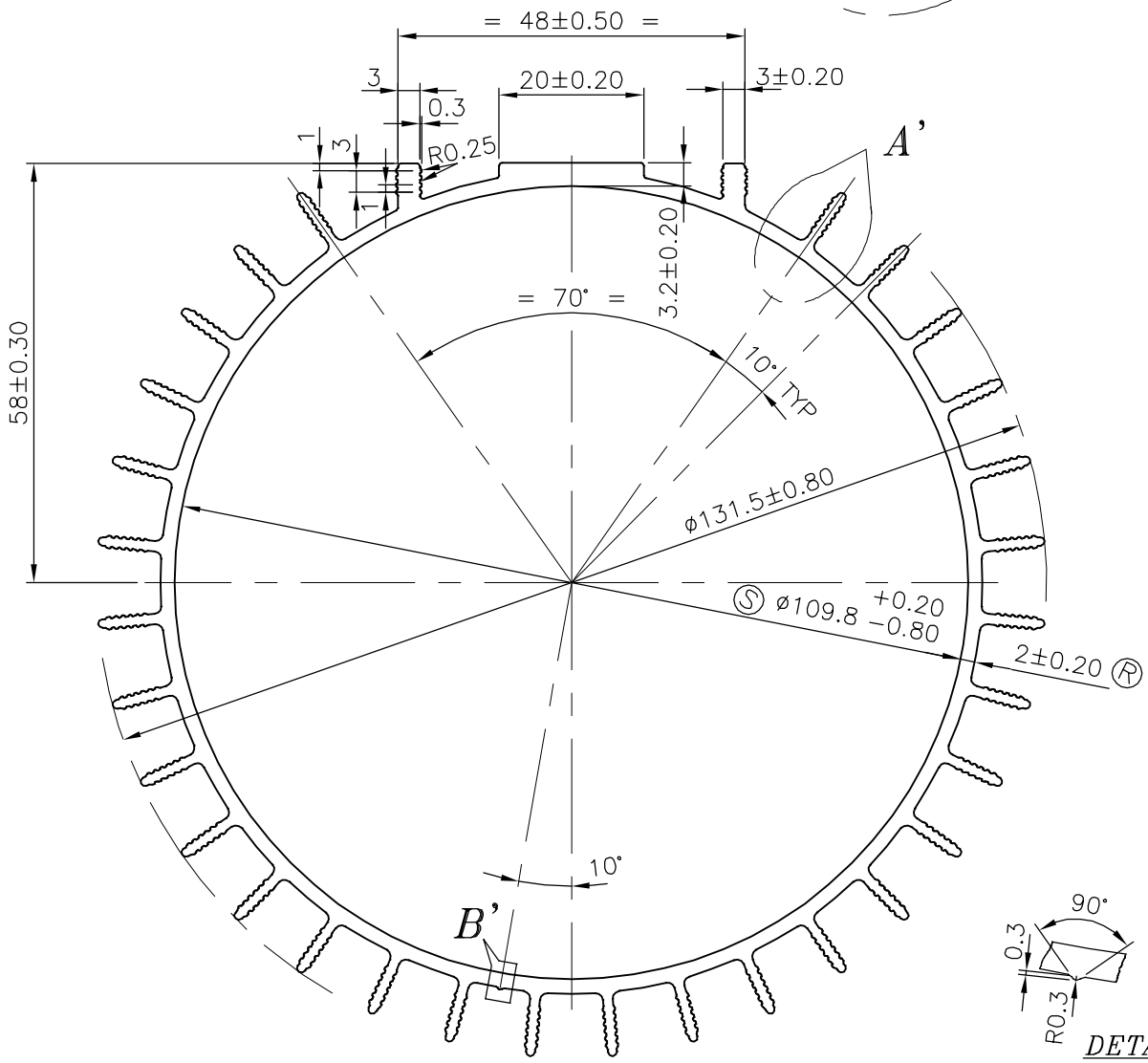

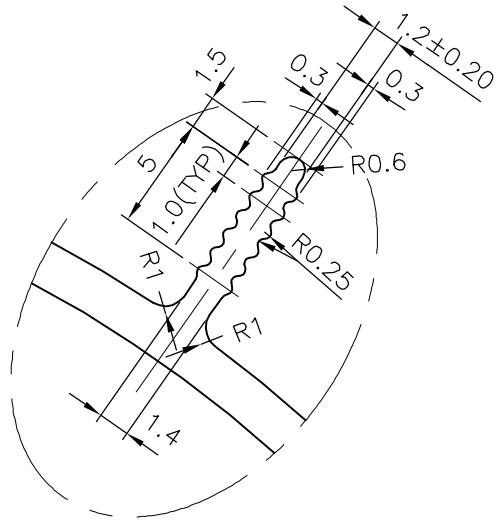

DETAIL−A
SCALE:−3:1

DETAIL−B
SCALE:−2:1

S & R ARE THE CRITICAL DIMENSIONS

			NAME	DATE
JINDAL SYMBOL OF QUALITY AN ISO 9001 COMPANY	*JINDAL ALUMINIUM LTD.* *BANGALORE−560073 (INDIA)*	DRAWN	J.P.KAUSHIK	26−10−2019
		CHECKED		
		APPROVED	*B.NATARAJA*	12−11−2019

1. ALL DIMENSIONS ARE IN mm.
2. ROUND OFF ALL SHARP CORNERS WITH 0.40 mm.
3. TOLERANCES WILL BE AS PER IS:6477−1983 UNLESS OTHERWISE SPECIFIED

SCALE	1:1
AREA mm^2	1161.801
PERIMETER mm.	943.144
WEIGHT kg/m	3.137

		DRAWING No.	SECTION No.
PARTY'S NAME	GANGA ENGINEERING CORPORATION, COIMBATORE		
PARTY'S DRAWING No.	MODIFIED OF 27225 & REQUIREMENT	P−20030−2	−
ALLOY & TEMPER	HE9 WP	27290	27290
DESCRIPTION	MOTOR BODY		