7769	
27332	

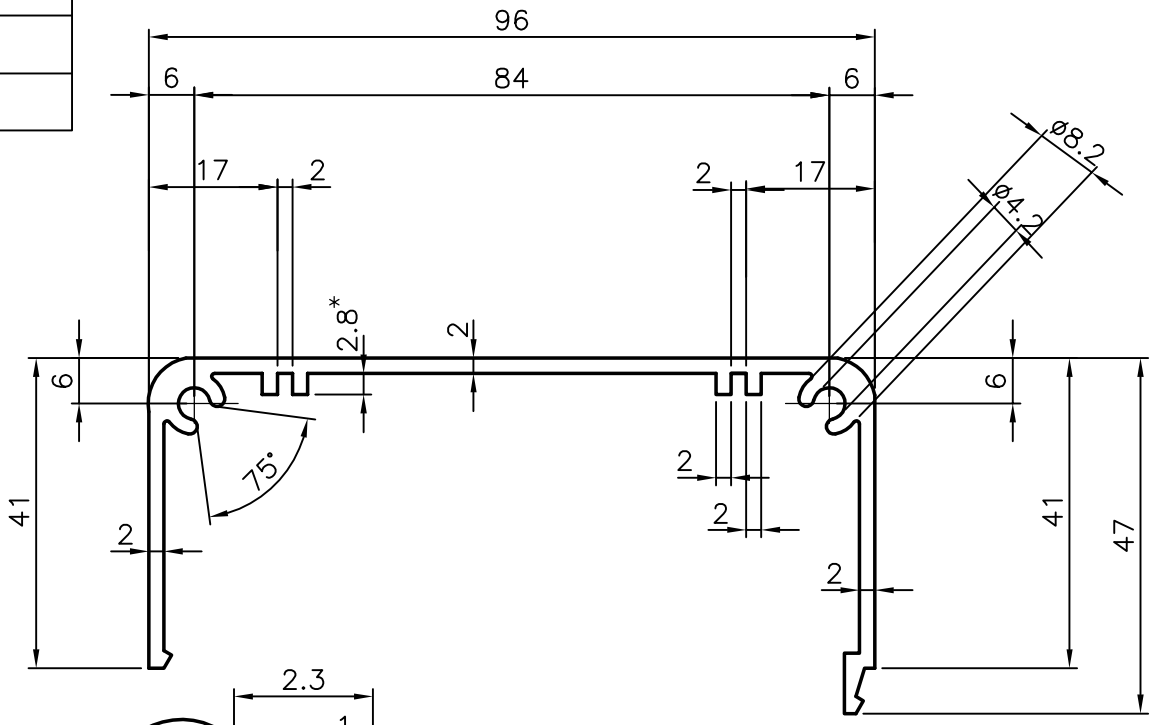

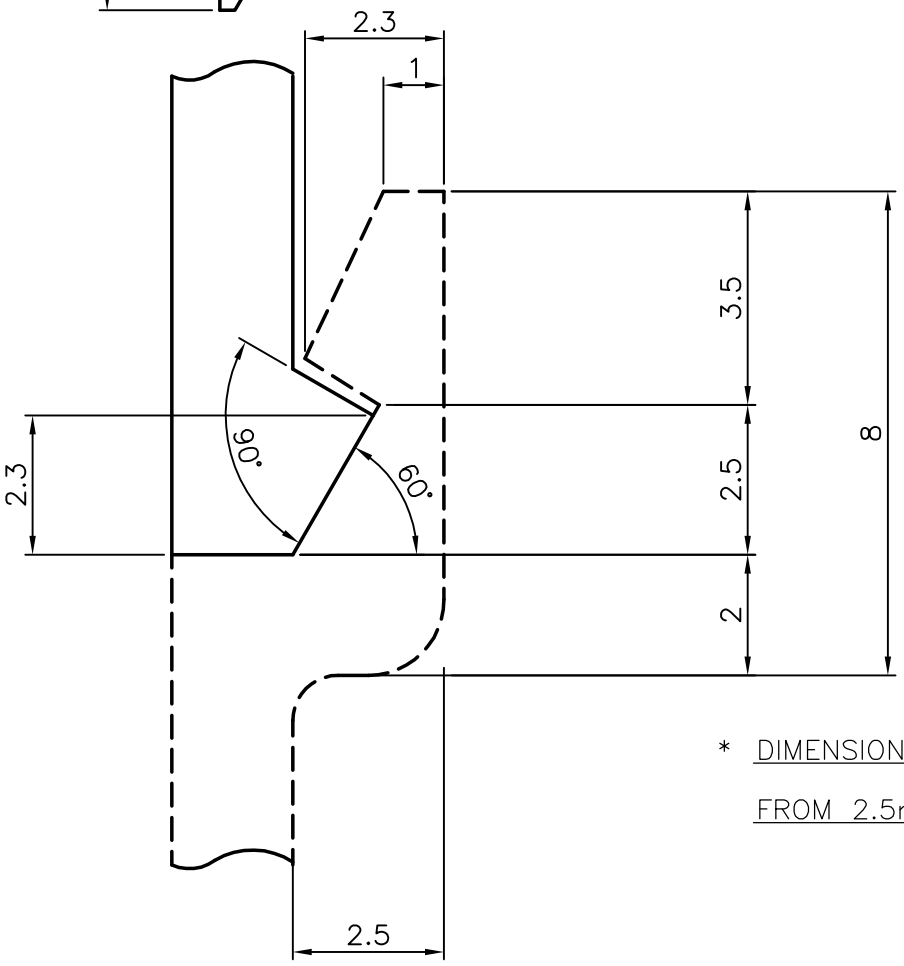

* DIMENSIONS INCREASED

FROM 2.5mm TO 2.8mm (15.5.86)

JINDAL SYMBOL OF QUALITY AN ISO 9002 COMPANY	***JINDAL ALUMINIUM LTD.*** ***BANGALORE–560073 (INDIA)***			NAME / DATE
			DRAWN	S.KUMAR / 18.4.81
			CHECKED	
1. ALL DIMENSIONS ARE IN mm. 2. ROUND OFF ALL SHARP CORNERS WITH 0.40 mm. 3. TOLERANCES WILL BE AS PER IS: 3965–1981, UNLESS OTHERWISE SPECIFIED			APPROVED	
			SCALE	1:1
PARTY'S NAME	A.P. INDUSTRIAL COMPONENTS PVT. LTD. (SECUNDERABAD)		WEIGHT kg/m	1.184
PARTY'S DRAWING No.	02–100/A		SECTION No.	27332
ALLOY & TEMPER	HE 9 WP	LENGTH: AS REQUIRED	DRAWING No.	27332
DESCRIPTION	HOUSING			