P–4299–2
7051
27350

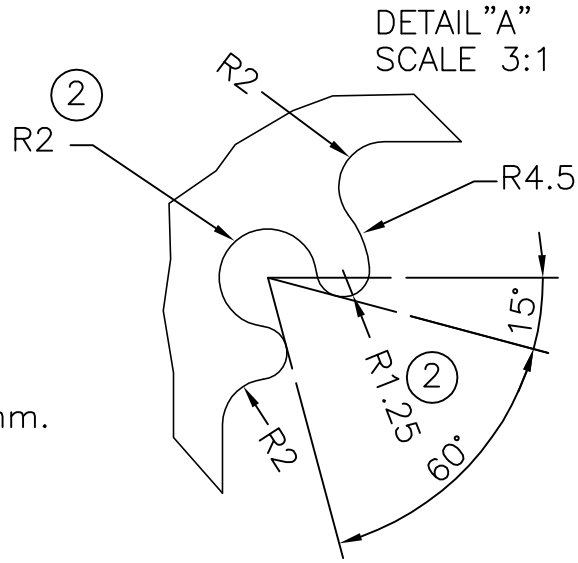

GENERAL WALL THICKNESS = 4.00mm.
* = R1.0 (4 PLACES)

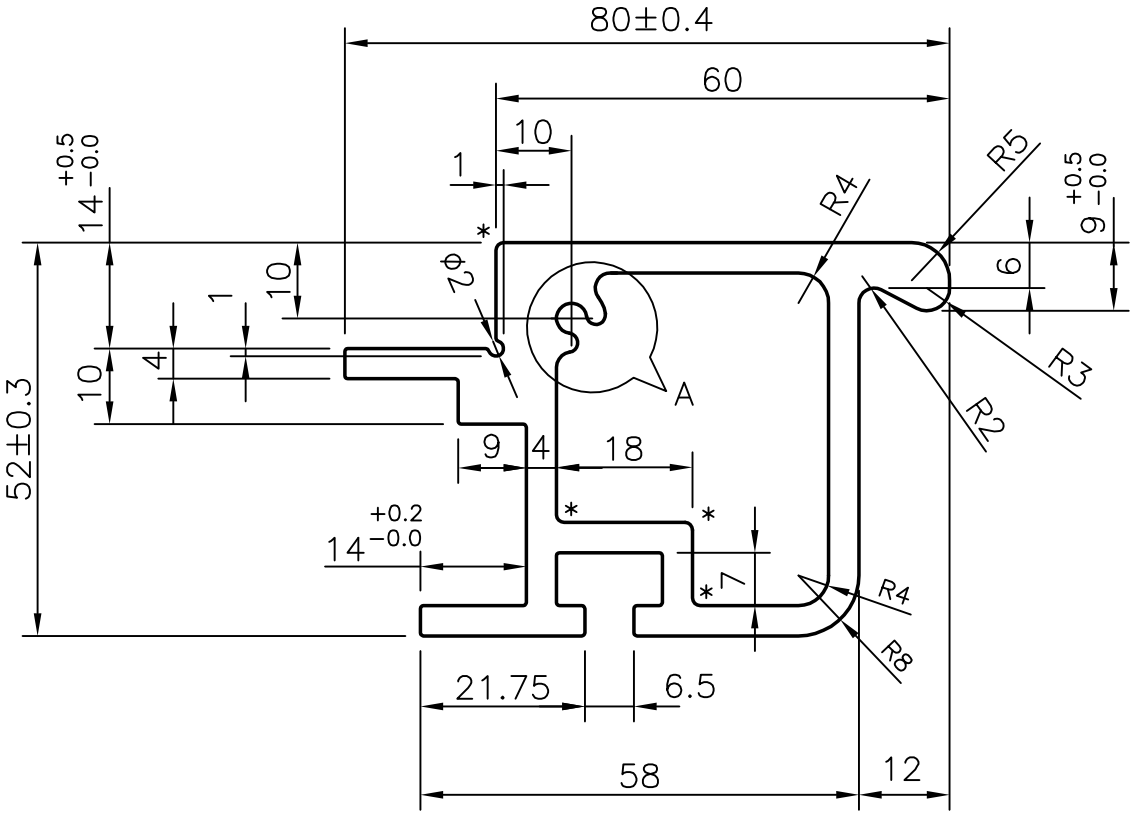

ISSUE–2 DIMENSION CHANGED FROM
R2.15 TO R2.00
R1.17 TO R1.25 &
WEIGHT ALSO CHANGED FROM 3.111 TO 3.116 kg/M

			NAME	DATE
JINDAL SYMBOL OF QUALITY AN ISO 9002 COMPANY	*JINDAL ALUMINIUM LTD.* *BANGALORE–560073 (INDIA)*	DRAWN	RAGHAVENDRA	08–07–2004
		CHECKED		
		APPROVED		
1. ALL DIMENSIONS ARE IN mm. 2. ROUND OFF ALL SHARP CORNERS WITH 0.40 mm. 3. TOLERANCES WILL BE AS PER BS:1474–1987 UNLESS OTHERWISE SPECIFIED		SCALE		1:1
		AREA mm^2		1153.954
		PERIMETER mm.		324.258
PARTY'S NAME	SHIMADZU, SINGAPORE	WEIGHT kg/m		3.116
		DRAWING No.		SECTION No.
PARTY'S DRAWING No.	511–10016	P–4299–2		–
		7051		7051–ISSUE–2
ALLOY & TEMPER	6063 T6	27350		27350
DESCRIPTION	–			