9041
27456

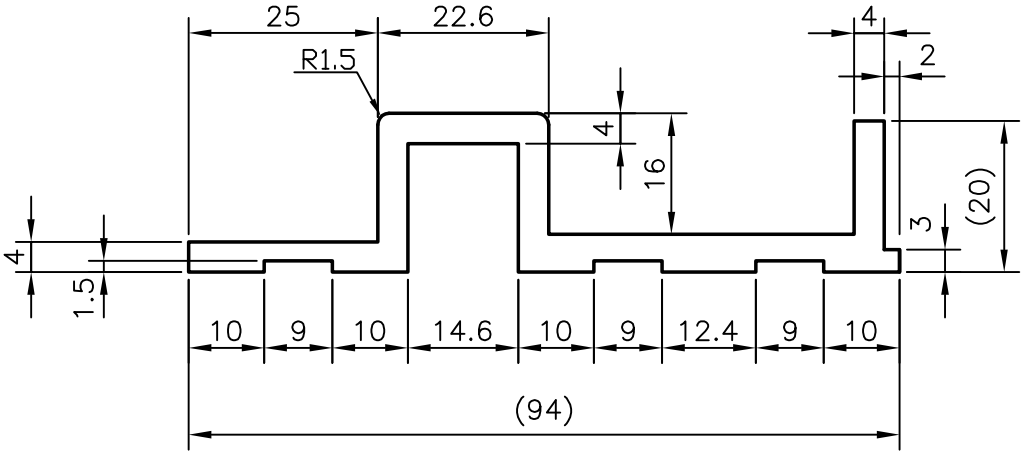

JINDAL SYMBOL OF QUALITY AN ISO 9002 COMPANY	*JINDAL ALUMINIUM LTD.* *BANGALORE–560073 (INDIA)*		NAME	DATE
		DRAWN	*J.P.KAUSHIK*	19–12–2006
		CHECKED		
		APPROVED		
1. ALL DIMENSIONS ARE IN mm. 2. ROUND OFF ALL SHARP CORNERS WITH 0.40 mm. 3. TOLERANCES WILL BE AS PER IS:3965–1981 UNLESS OTHERWISE SPECIFIED		SCALE		1:1
		AREA mm^2		573.934
		PERIMETER mm.		298.712
		WEIGHT kg/m		1.547
PARTY'S NAME	–	DRAWING No.		SECTION No.
PARTY'S DRAWING No.	–	9041		9041
ALLOY & TEMPER	HE9 WP	27456		27456
DESCRIPTION	LIFT SECTION			