P–5380	
27572	

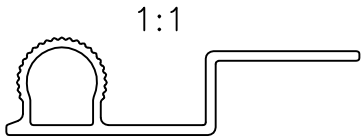

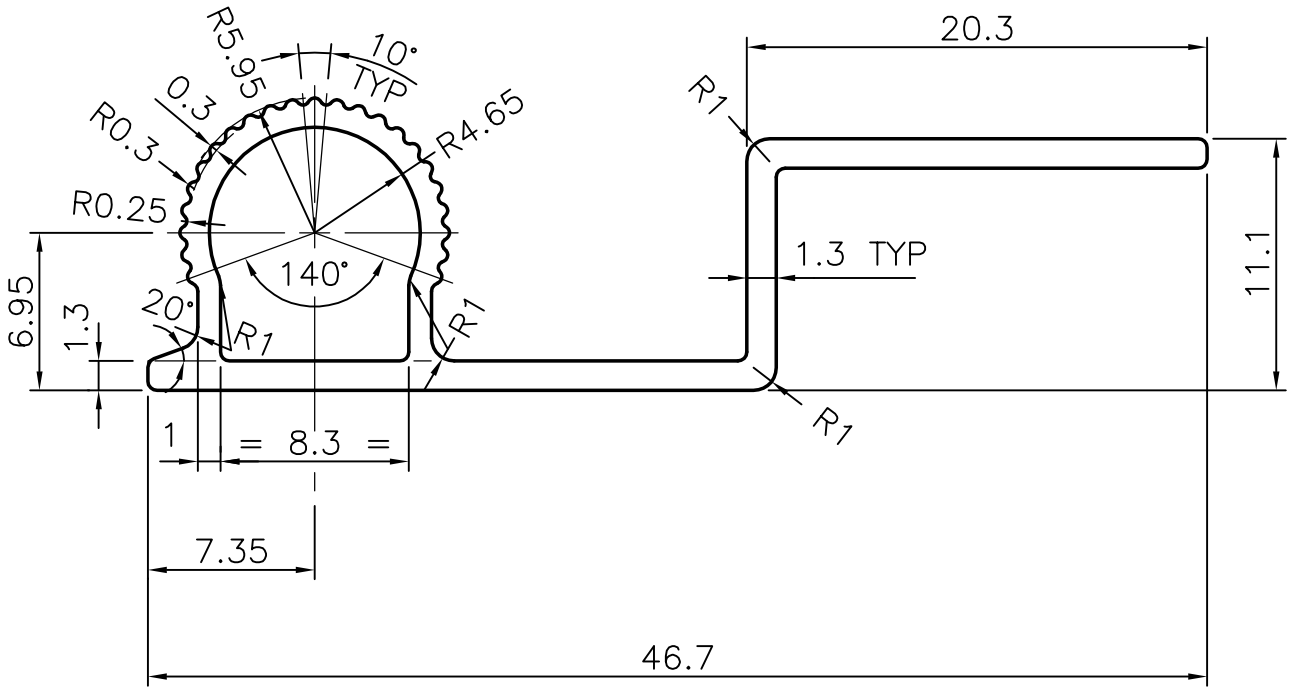

JINDAL SYMBOL OF QUALITY AN ISO 9001 COMPANY	*JINDAL ALUMINIUM LTD.* *BANGALORE–560073 (INDIA)*		NAME	DATE
		DRAWN	MALINGAPPA	19.03.2005
		CHECKED		
		APPROVED		
1. ALL DIMENSIONS ARE IN mm. 2. ROUND OFF ALL SHARP CORNERS WITH 0.40 mm. 3. TOLERANCES WILL BE AS PER IS: 6477–1983 UNLESS OTHERWISE SPECIFIED		SCALE		3:1
		AREA mm^2		105.484
		PERIMETER mm.		136.910
PARTY'S NAME	GENERAL CATEGORY, DELHI MARKET	WEIGHT kg/m		0.285
		DRAWING No.		SECTION No.
PARTY'S DRAWING No.	AS PER SAMPLE	P–5380		–
		27572		27572
ALLOY & TEMPER	HE9 WP			
DESCRIPTION	MISCELLANEOUS			