P–5956
S1638
27633

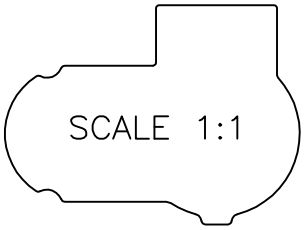

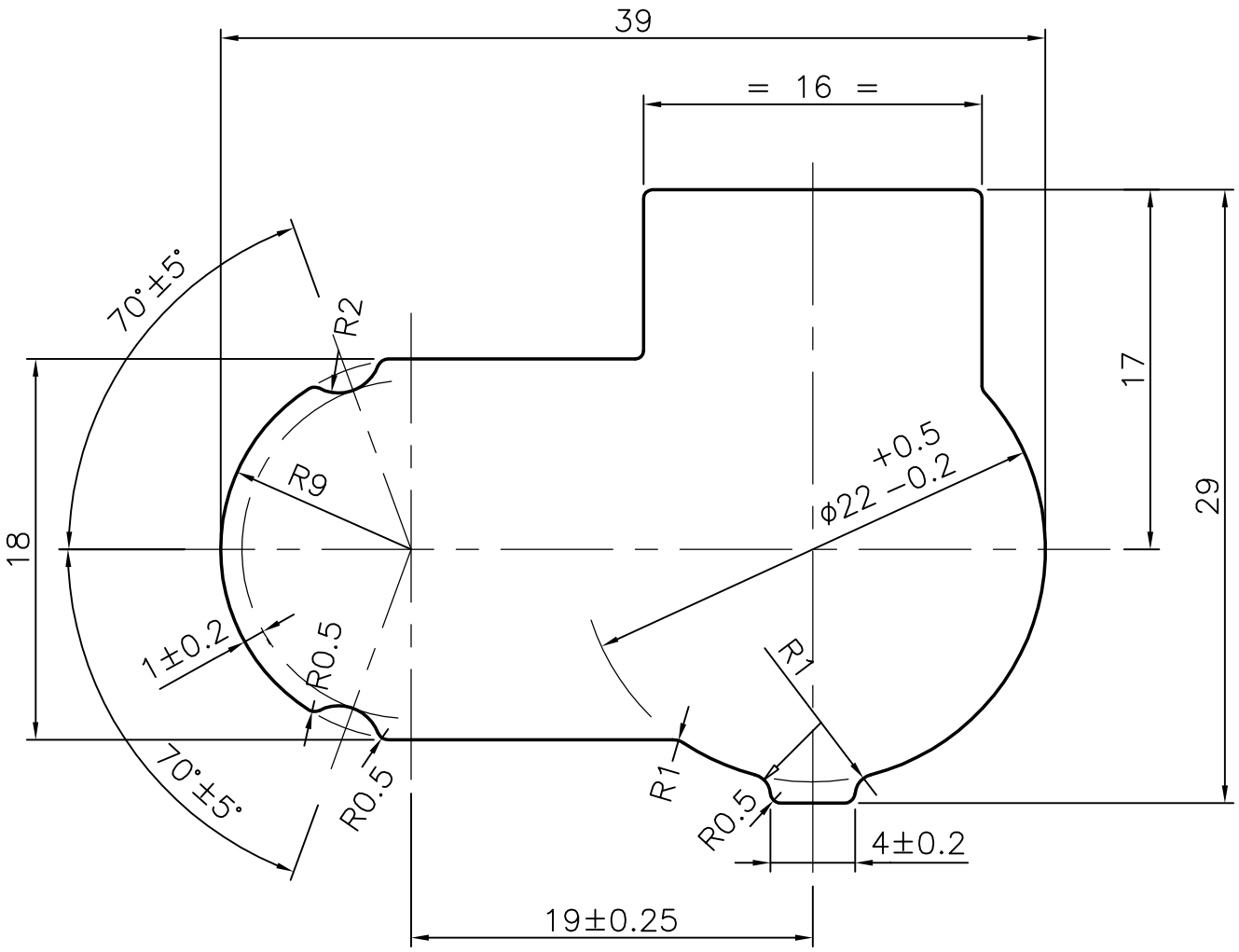

JINDAL SYMBOL OF QUALITY AN ISO 9001 COMPANY	*JINDAL ALUMINIUM LTD.* *BANGALORE–560073 (INDIA)*		NAME	DATE
		DRAWN	RAGHAVENDRA	14–11–2005
		CHECKED		
		APPROVED		

1. ALL DIMENSIONS ARE IN mm.
2. ROUND OFF ALL SHARP CORNERS WITH 0.40 mm.
3. TOLERANCES WILL BE AS PER IS:3965–1981 UNLESS OTHERWISE SPECIFIED

SCALE	3:1
AREA mm^2	788.28
PERIMETER mm.	119.542
WEIGHT kg/m	2.128

PARTY'S NAME	GLOBAL AUTOTECH PVT. LTD., NOIDA (U.P)
PARTY'S DRAWING No.	446171–3640
ALLOY & TEMPER	65032 WP
DESCRIPTION	TUBE CONNECTOR

DRAWING No.	SECTION No.
P–5956	–
S1638	S1638
27633	27633