P–5965
S1644
27738

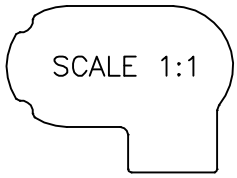

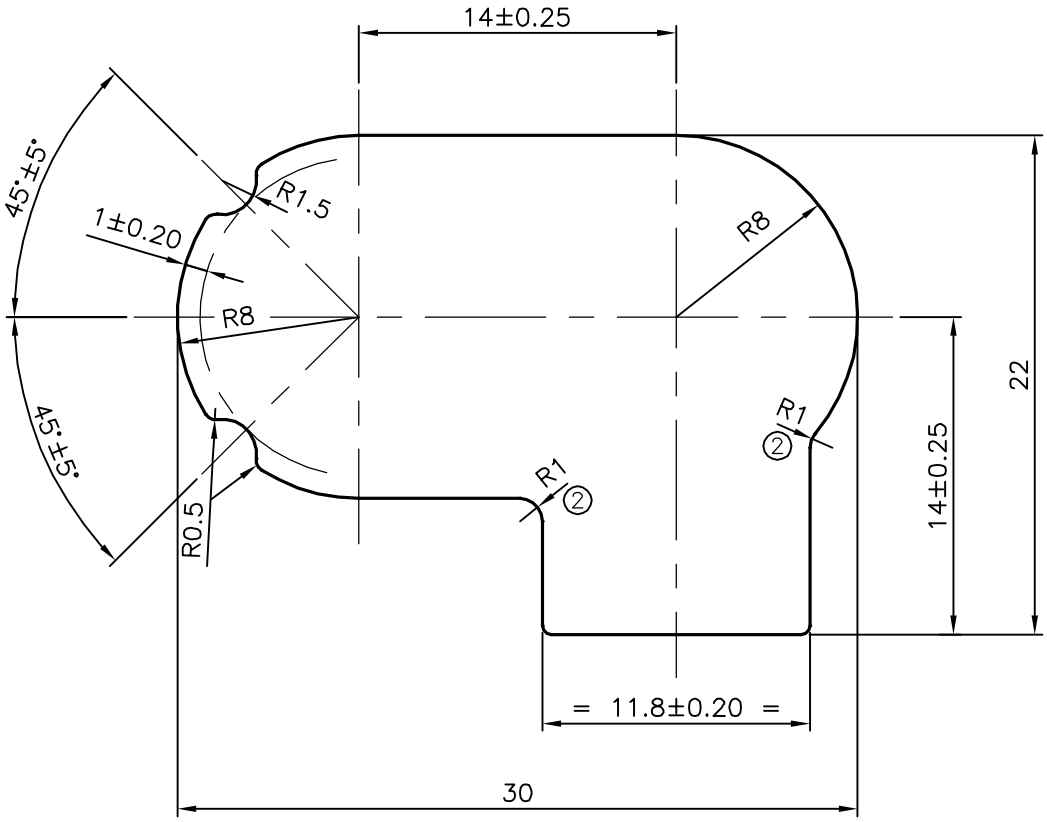

ISSUE–2

RADIUS CHANGED FROM 0.4 mm TO 1.0 mm

JINDAL SYMBOL OF QUALITY AN ISO 9001 COMPANY	*JINDAL ALUMINIUM LTD.* *BANGALORE–560073 (INDIA)*		NAME	DATE
		DRAWN	J.P.KAUSHIK	16–04–2016
		CHECKED		
		APPROVED	S.S. GARG	28–04–2016
1. ALL DIMENSIONS ARE IN mm. 2. ROUND OFF ALL SHARP CORNERS WITH 0.40 mm. 3. TOLERANCES WILL BE AS PER IS:3965–1981 UNLESS OTHERWISE SPECIFIED		SCALE		3:1
		AREA mm^2		496.761
		PERIMETER mm.		92.337
PARTY'S NAME	GLOBAL AUTOTECH PVT. LTD., NOIDA (U.P)	WEIGHT kg/m		1.341
		DRAWING No.		SECTION No.
PARTY'S DRAWING No.	TC–EX–002–00	P–5965		–
ALLOY & TEMPER	65032 WP	S1644		S1644
		27738		27738(ISSUE–2)
DESCRIPTION	TUBE CONNECTOR			