P–8316

27775 (ISSUE–2)

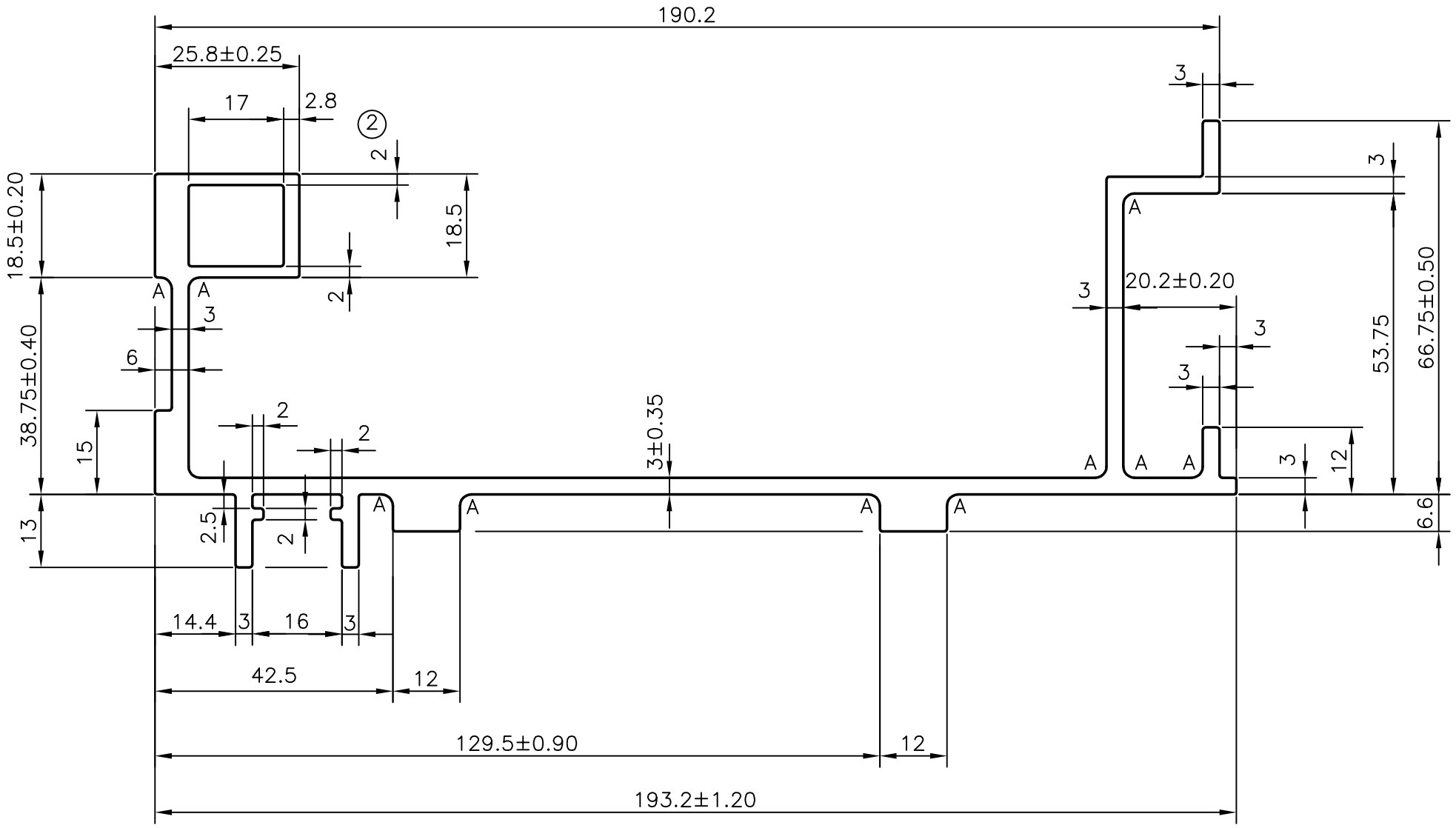

A = RADIUS 2 mm. (10)

UNSPECIFIED RADII = 0.50 mm.

(2) DIMENSION CHANGED FROM 3 mm. TO 2 mm AS PER CUSTOMER'S REQUIREMENT & WEIGHT ALSO CHANGED FROM 4.033 kg/m TO 3.987 kg/m

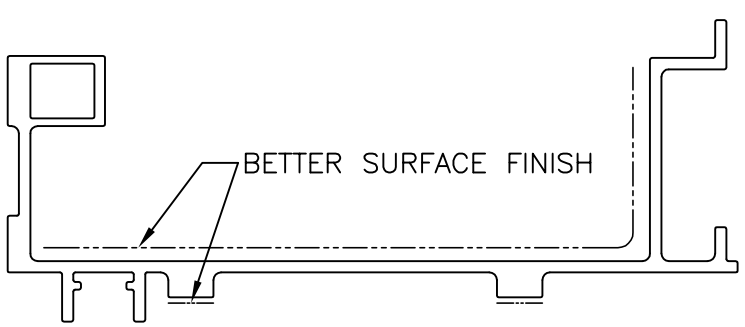

JINDAL SYMBOL OF QUALITY AN ISO 9002 COMPANY	*JINDAL ALUMINIUM LTD.* *BANGALORE–560073 (INDIA)*		NAME	DATE
		DRAWN	ABHA RANI	28–07–2008
		CHECKED		
		APPROVED		
1. ALL DIMENSIONS ARE IN mm. 2. ROUND OFF ALL SHARP CORNERS WITH 0.5 mm. 3. TOLERANCES WILL BE AS PER IS: 6477–1983 UNLESS OTHERWISE SPECIFIED		SCALE		1:1
		AREA mm²		1476.752
		PERIMETER mm.		795.417
PARTY'S NAME	PLENUM TECHNOLOGIES PVT. LTD., NAGPUR	WEIGHT kg/m		3.987 (2)
		DRAWING No.		SECTION No.
PARTY'S DRAWING No.	260508	P–8316		
ALLOY & TEMPER	6063 T6	27775		27775 ISSUE–2
DESCRIPTION	BASE PLATE SECTION			