P-8021-3

27785

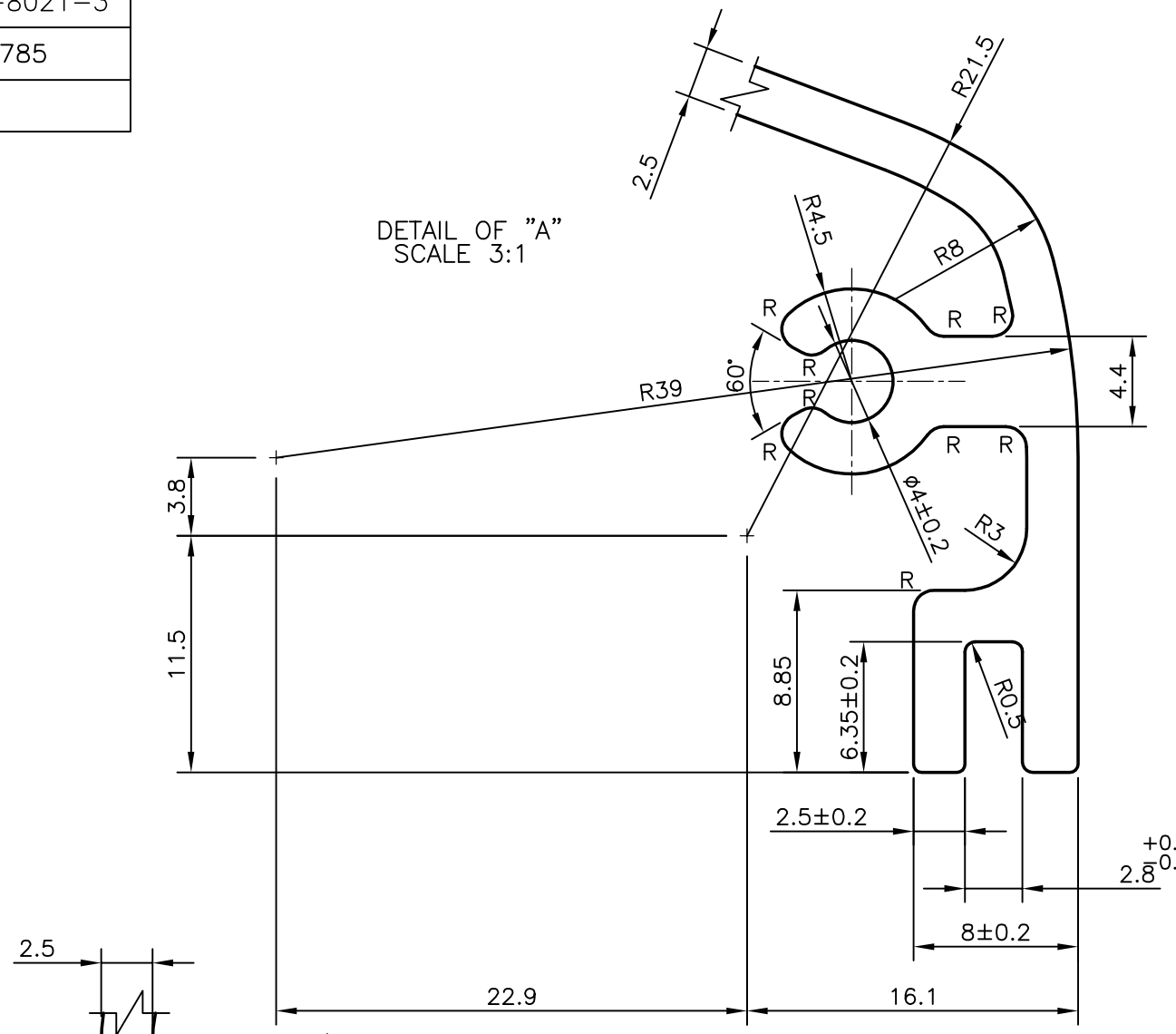

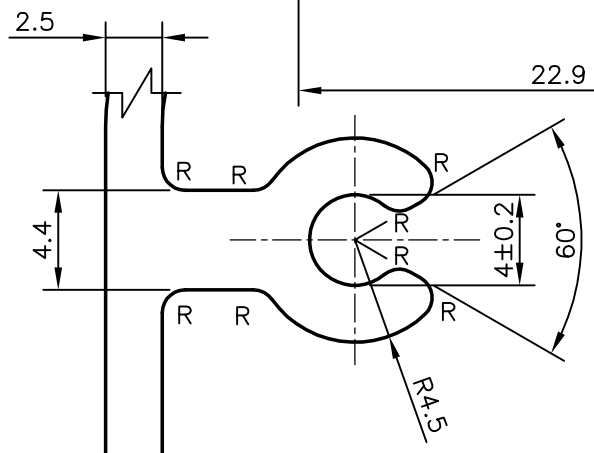

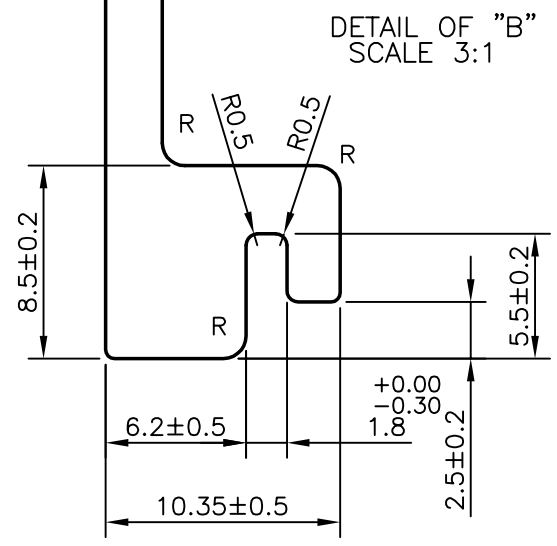

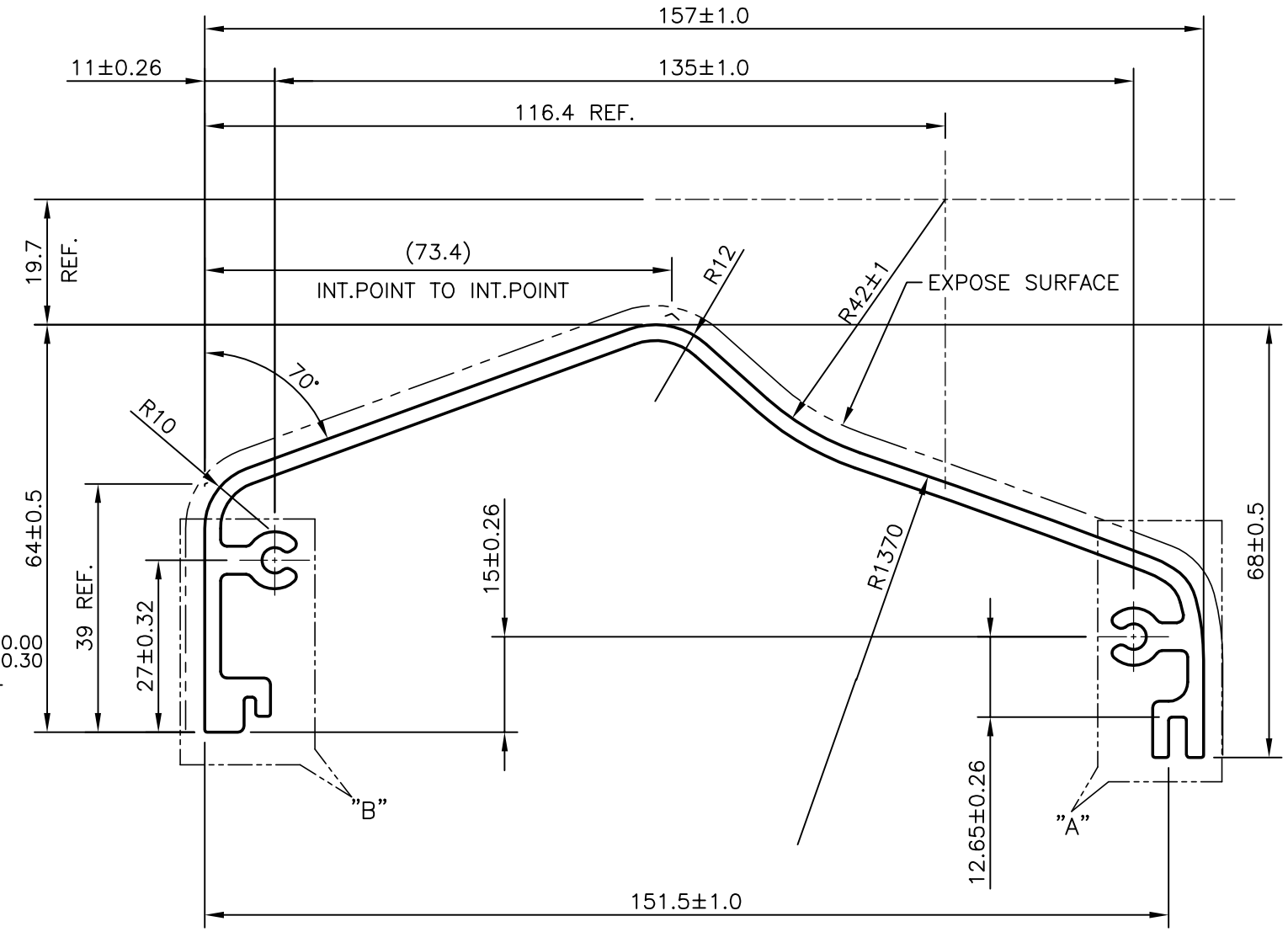

TWIST IS 1.5°/M
FLATNESS ±0.56 mm
STRAIGHTNESS IS 1.7 mm/M
BREAK AND DEBURR ALL SHARP EDGES
R = R1.0 mm (20 PLACES)
UNSPECIFIED WALL THICKNESS = 2.50 mm

			NAME	DATE
JINDAL SYMBOL OF QUALITY AN ISO 9001 COMPANY	*JINDAL ALUMINIUM LTD.* *BANGALORE-560073 (INDIA)*	DRAWN	PRASANNA.H	19-07-2008
		CHECKED		
		APPROVED		
1. ALL DIMENSIONS ARE IN mm. 2. ROUND OFF ALL SHARP CORNERS WITH 0.40 mm. 3. TOLERANCES WILL BE AS PER IS:3965-1981 UNLESS OTHERWISE SPECIFIED		SCALE		1:1
		AREA mm^2		780.537
		PERIMETER mm.		578.862
PARTY'S NAME	GENEVA FINPUNCH ENCLOSURES LTD., BANGALORE	WEIGHT kg/m		2.107
		DRAWING No.		SECTION No.
PARTY'S DRAWING No.	2040404-001/REV-01	P-8021-3		–
ALLOY & TEMPER	6063 T6	27785		27785
DESCRIPTION	MISC. SECTION			