P–8940–1
27819

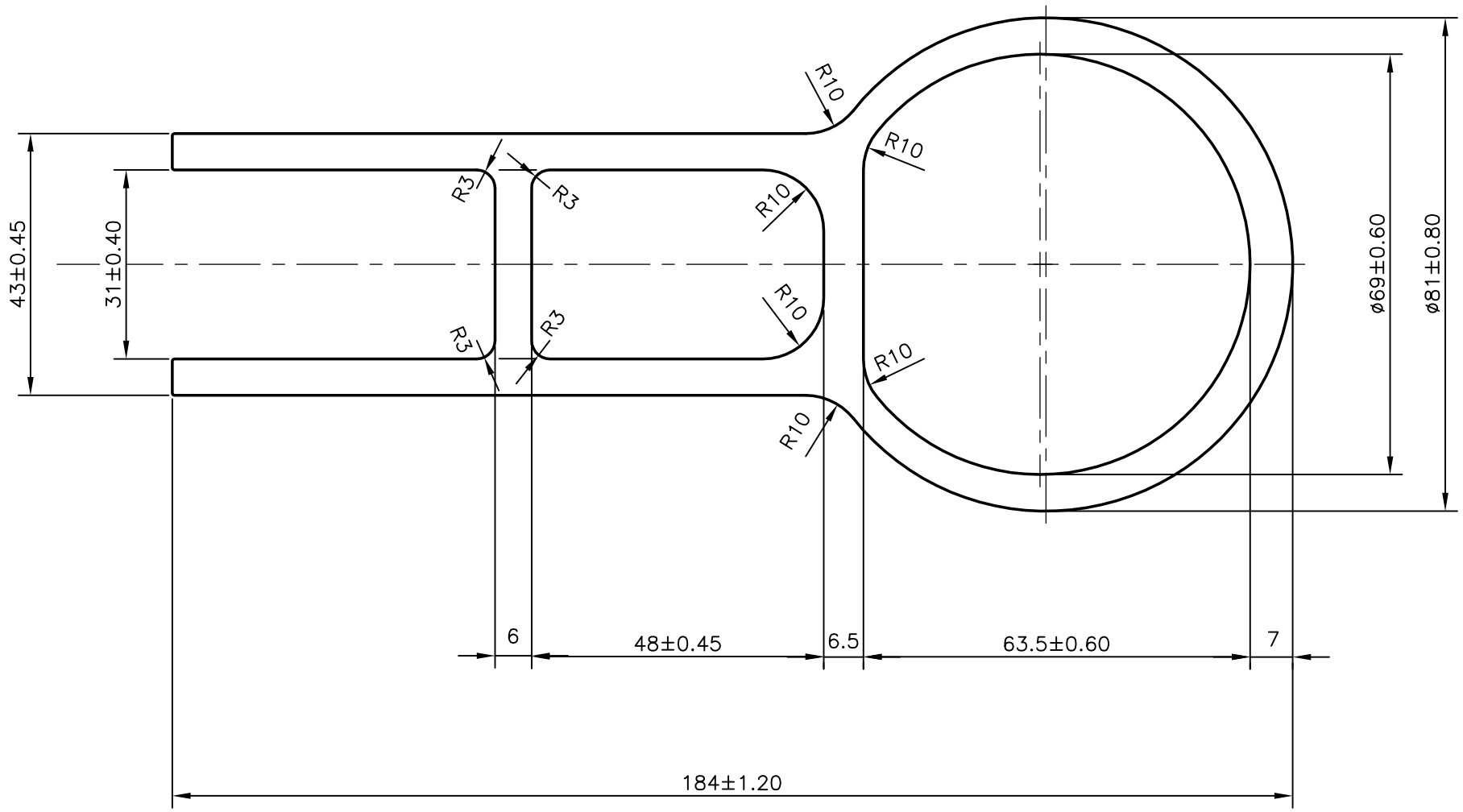

JINDAL SYMBOL OF QUALITY AN ISO 9001 COMPANY	*JINDAL ALUMINIUM LTD.* *BANGALORE–560073 (INDIA)*		NAME	DATE
		DRAWN	J.P.KAUSHIK	06–01–2009
		CHECKED		
		APPROVED		
1. ALL DIMENSIONS ARE IN mm. 2. ROUND OFF ALL SHARP CORNERS WITH 0.40 mm. 3. TOLERANCES WILL BE AS PER IS:6477–1983 UNLESS OTHERWISE SPECIFIED		SCALE		1:1
		AREA mm^2		2996.991
		PERIMETER mm.		571.652
		WEIGHT kg/m		8.092
PARTY'S NAME	A.V.INDUSTRIES. MUMBAI	DRAWING No.		SECTION No.
PARTY'S DRAWING No.	AVI–2557–A	P–8940–1		–
ALLOY & TEMPER	HE9 WP	27819		27819
DESCRIPTION	MISC. SECTION			