| |
|---|
| P–9231 |
| S2135 |
| 27893 |

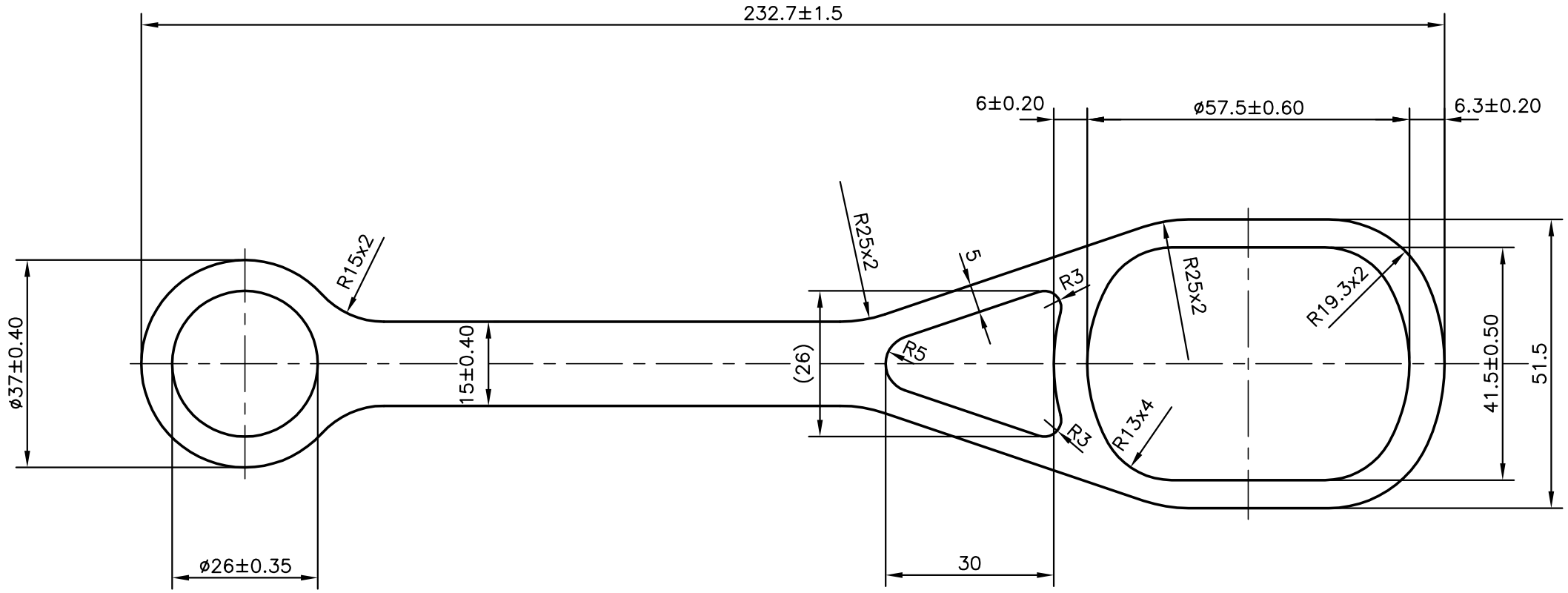


| | | | NAME | DATE |
|---|---|---|---|---|
| JINDAL SYMBOL OF QUALITY AN ISO 9001 COMPANY | *JINDAL ALUMINIUM LTD.* *BANGALORE–560073 (INDIA)* | DRAWN | J.P.KAUSHIK | 18–05–2009 |
| | | CHECKED | | |
| | | APPROVED | | |

1. ALL DIMENSIONS ARE IN mm.
2. ROUND OFF ALL SHARP CORNERS WITH 0.40 mm.
3. TOLERANCES WILL BE AS PER IS:6477–1983 UNLESS OTHERWISE SPECIFIED

| | | | |
|---|---|---|---|
| SCALE | | 1:1 | |
| AREA $mm^2$ | | 3436.737 | |
| PERIMETER mm. | | 531.053 | |
| WEIGHT kg/m | | 9.279 | |
| DRAWING No. | | SECTION No. | |
| PARTY'S NAME | A.V. INDUSTRIES, MUMBAI | P–9231 | – |
| PARTY'S DRAWING No. | AVI–2644–A | S2135 | S2135 |
| ALLOY & TEMPER | HE9 WP | 27893 | 27893 |
| DESCRIPTION | MISC. SECTION | | |