P−9625
S2377
27931

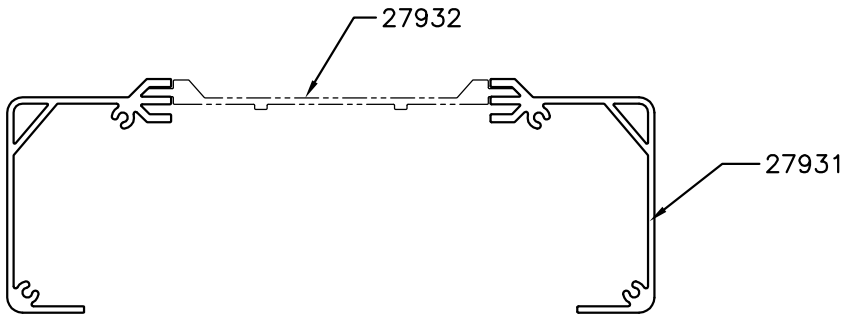

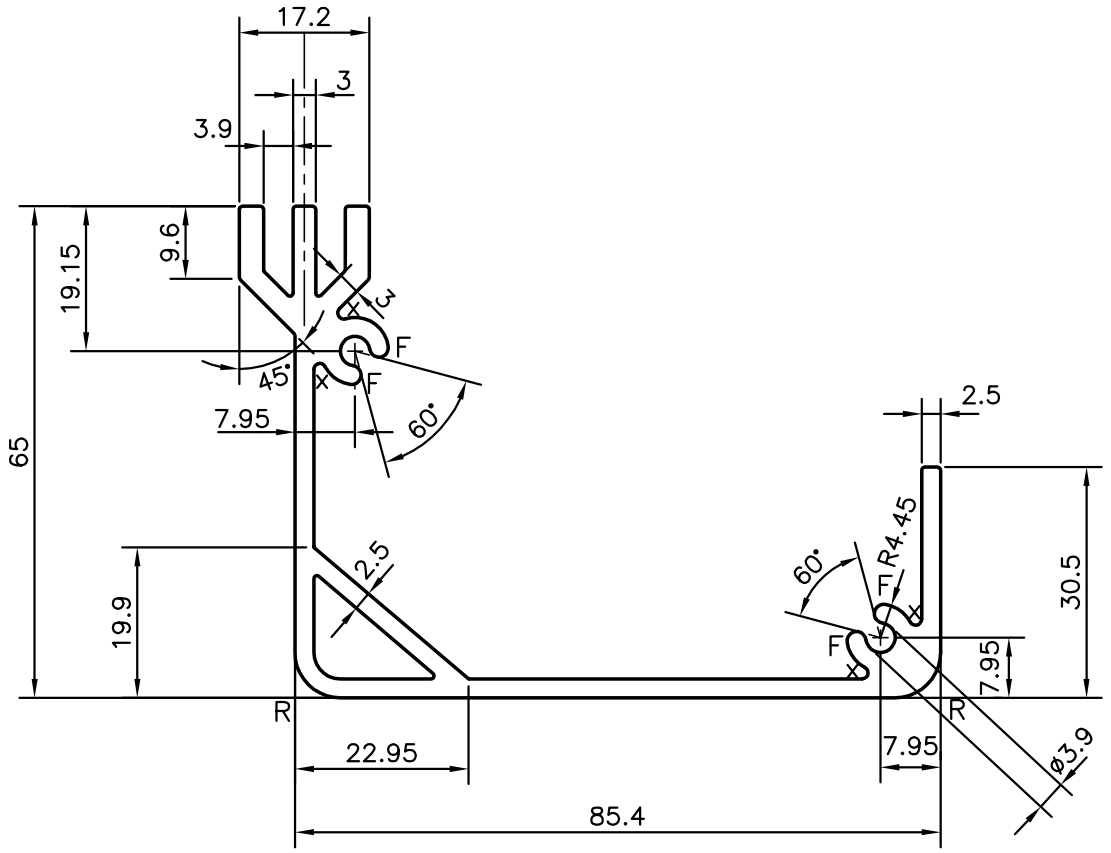

R= RADIUS 6.00 (2 PLACES)
x= RADIUS 0.80 (4 PLACES)
F= FULL RADIUS (4 PLACES)
GENERAL WALL THICKNESS 2.5 mm

			NAME	DATE
JINDAL SYMBOL OF QUALITY AN ISO 9001 COMPANY	JINDAL ALUMINIUM LTD. BANGALORE−560073 (INDIA)	DRAWN	J.P.KAUSHIK	11−11−2009
		CHECKED		
		APPROVED		

1. ALL DIMENSIONS ARE IN mm.
2. ROUND OFF ALL SHARP CORNERS WITH 0.40 mm.
3. TOLERANCES WILL BE AS PER IS:6477−1983 UNLESS OTHERWISE SPECIFIED

SCALE		1:1	
AREA mm²		708.75	
PERIMETER mm.		439.802	
WEIGHT kg/m		1.914	
PARTY'S NAME	KARNATAKA INDUSTRIES, BANGALORE	DRAWING No.	SECTION No.
PARTY'S DRAWING No.	AS PER SAMPLE	P−9625	−
ALLOY & TEMPER	6063 T6	S2377	S2377
DESCRIPTION	MISC. SECTION	27931	27931