P–11208–1
S3090
27938

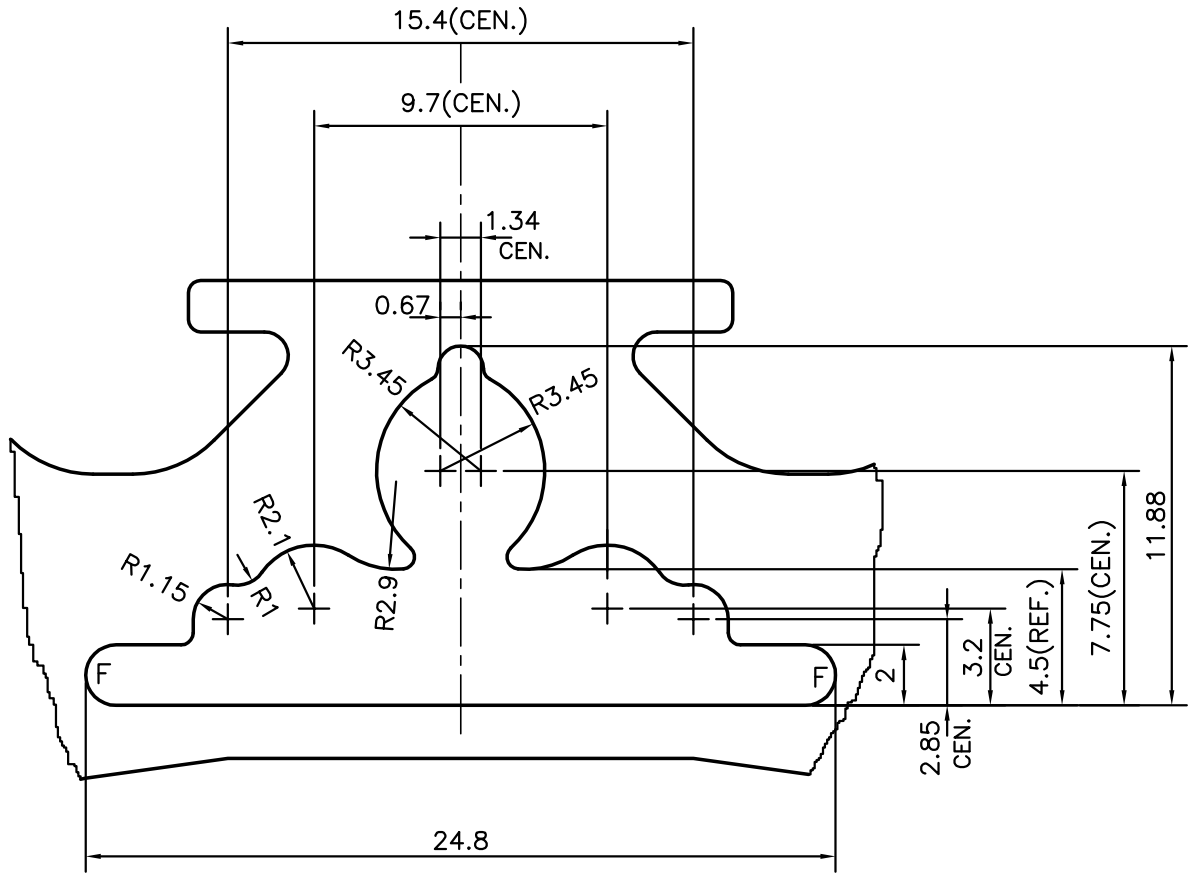

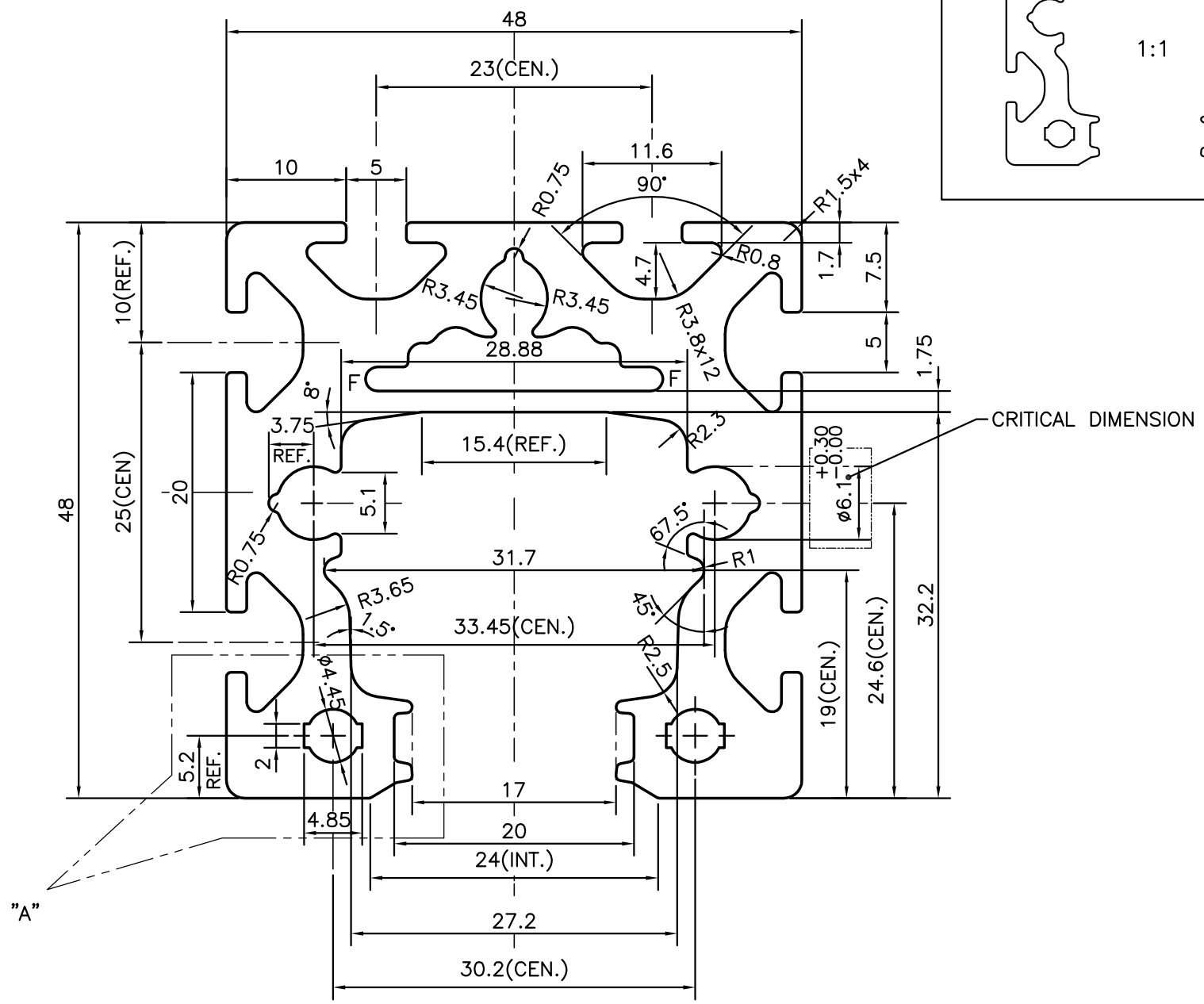

F = FULL RADIUS (2 PLACES)

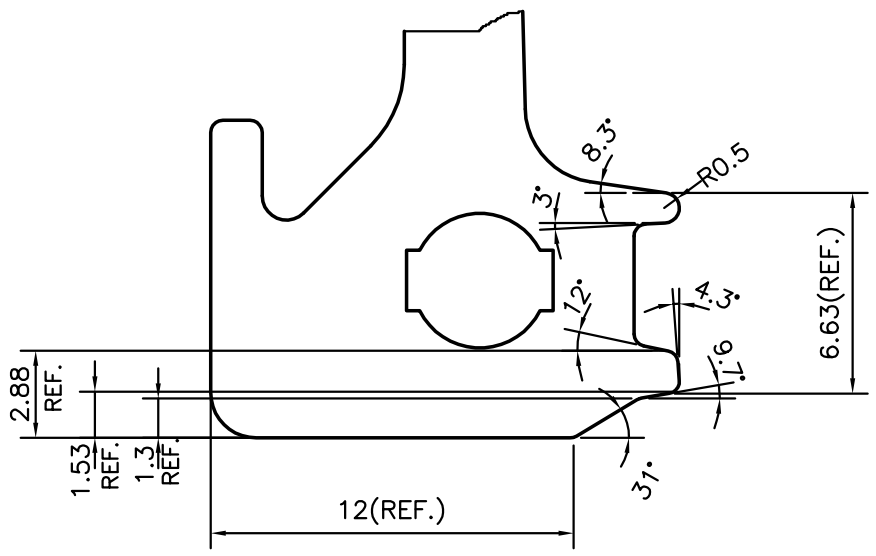

DETAIL OF "A"
SCALE 4:1

JINDAL SYMBOL OF QUALITY AN ISO 9001 COMPANY	JINDAL ALUMINIUM LTD. BANGALORE–560073 (INDIA)		NAME	DATE
		DRAWN	J.P.KAUSHIK	24–10–2011
		CHECKED		
		APPROVED	S.S.GARG	09–11–2011
1. ALL DIMENSIONS ARE IN mm. 2. ROUND OFF ALL SHARP CORNERS WITH 0.40 mm. 3. TOLERANCES WILL BE AS PER BS:EN–755–9 UNLESS OTHERWISE SPECIFIED		SCALE		2:1
		AREA mm^2		958.586
		PERIMETER mm.		413.464
		WEIGHT kg/m		2.588
PARTY'S NAME	OPTIMA ENGINEERING SYSTEMS, MUMBAI	DRAWING No.		SECTION No.
PARTY'S DRAWING No.	OES 47	P–11208–1		–
ALLOY & TEMPER	6063 T6	S3090		S3090
		27938		27938
DESCRIPTION	MISC. SECTION			