P−9824−1
S2458
27945

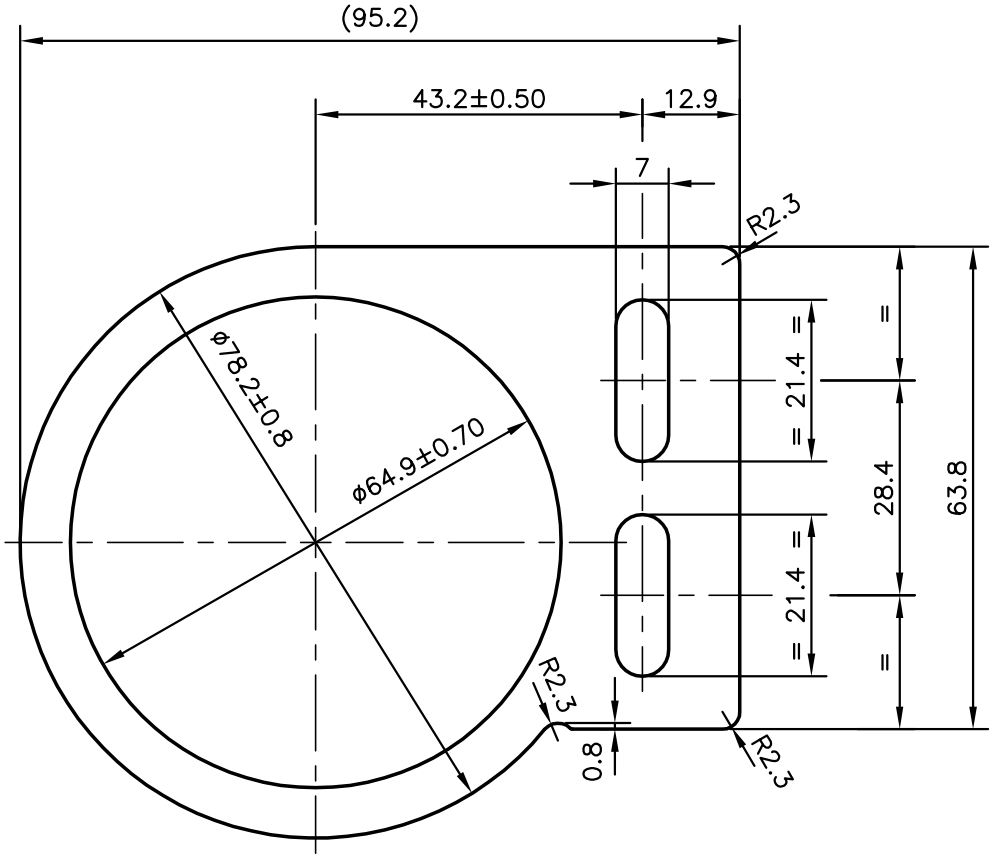

JINDAL SYMBOL OF QUALITY AN ISO 9001 COMPANY	*JINDAL ALUMINIUM LTD.* *BANGALORE−560073 (INDIA)*		NAME	DATE
		DRAWN	J.P.KAUSHIK	17−02−2010
		CHECKED		
		APPROVED	S.S.GARG	19−02−2010
1. ALL DIMENSIONS ARE IN mm. 2. ROUND OFF ALL SHARP CORNERS WITH 0.40 mm. 3. TOLERANCES WILL BE AS PER IS:6477−1983, UNLESS OTHERWISE SPECIFIED		SCALE		1:1
		AREA mm^2		2693.465
		PERIMETER mm.		301.685
		WEIGHT kg/m		7.272
PARTY'S NAME	STORK RUBBER PRODUCTS PVT. LTD.,GURGAON	DRAWING No.		SECTION No.
PARTY'S DRAWING No.	SRPL 2364	P−9824−1		−
ALLOY & TEMPER	6082 T6	S2458		S2458
		27945		27945
DESCRIPTION	MISC. SECTION			