P−10229−1
S2628
27975

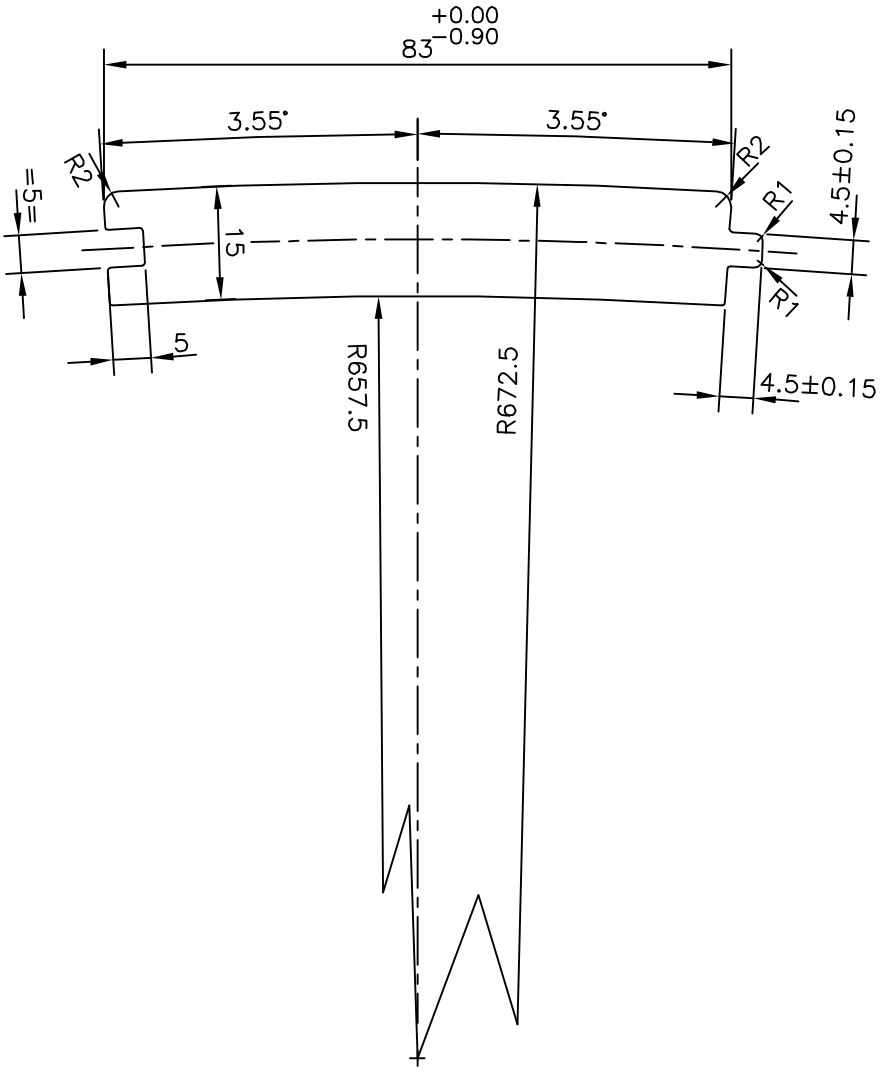

JINDAL SYMBOL OF QUALITY AN ISO 9001 COMPANY	*JINDAL ALUMINIUM LTD.* *BANGALORE−560073 (INDIA)*		NAME	DATE
		DRAWN	J.P.KAUSHIK	30−07−2010
		CHECKED		
		APPROVED	S.S.GARG	02−08−2010
1. ALL DIMENSIONS ARE IN mm. 2. ROUND OFF ALL SHARP CORNERS WITH 0.40 mm. 3. TOLERANCES WILL BE AS PER BS:EN−12020−2 UNLESS OTHERWISE SPECIFIED		SCALE		1:1
		AREA mm^2		1228.564
		PERIMETER mm.		209.775
PARTY'S NAME	BAJAJ TAMBULA PINNED PRODUCTSCTS PVT. LTD.,KOLKATA	WEIGHT kg/m		3.317
		DRAWING No.		SECTION No.
PARTY'S DRAWING No.	BT/DL/003/12−13	P−10229−1		−
ALLOY & TEMPER	6082 T6	S2628		S2628
		27975		27975
DESCRIPTION	MISC. SECTION			