P–10790
S2862
28006

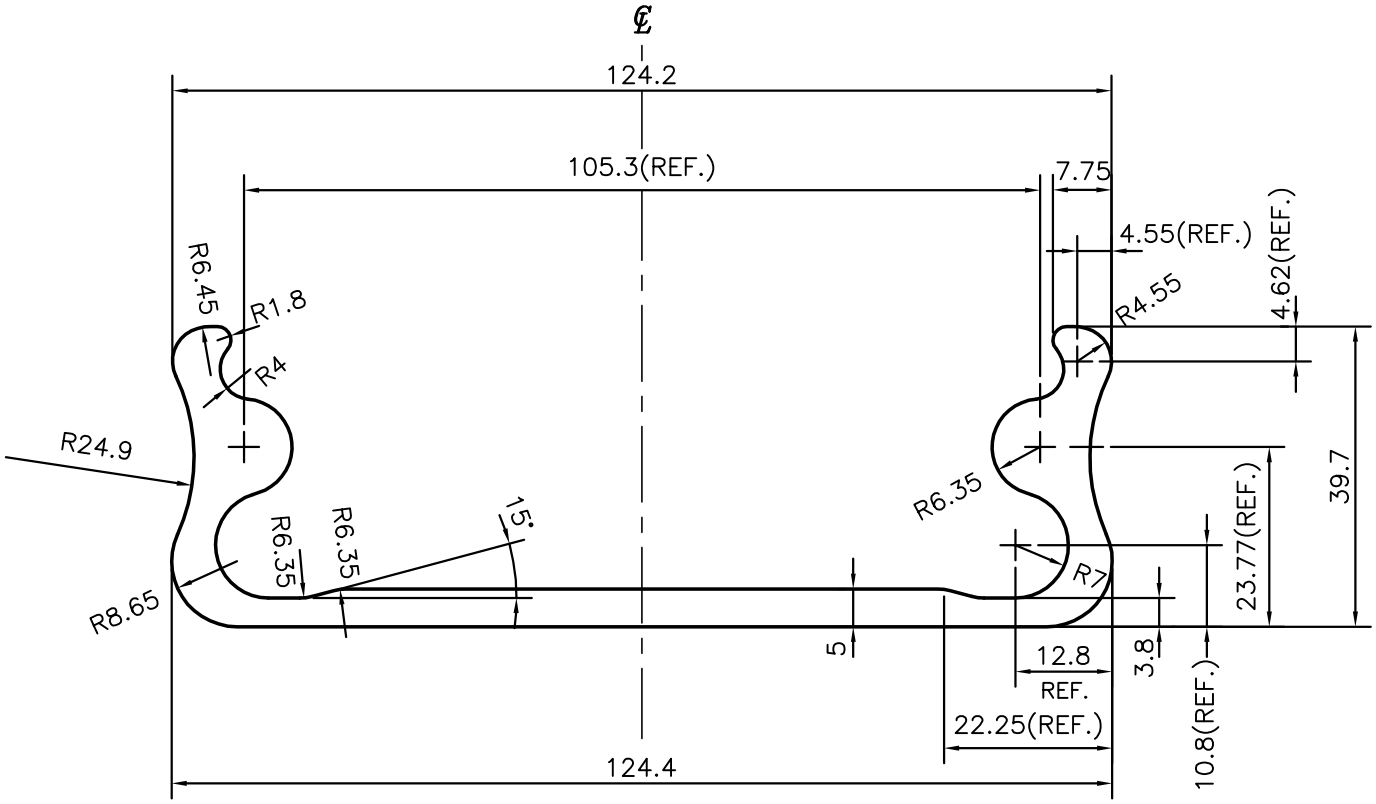

JINDAL SYMBOL OF QUALITY AN ISO 9001 COMPANY	*JINDAL ALUMINIUM LTD.* *BANGALORE–560073 (INDIA)*		NAME	DATE
		DRAWN	J.P.KAUSHIK	22–02–2011
		CHECKED		
		APPROVED	S.S.GARG	28–02–2011
1. ALL DIMENSIONS ARE IN mm. 2. ROUND OFF ALL SHARP CORNERS WITH 0.40 mm. 3. TOLERANCES WILL BE AS PER IS:3965–1981 UNLESS OTHERWISE SPECIFIED		SCALE		1:1
		AREA mm^2		1139.778
		PERIMETER mm.		407.152
		WEIGHT kg/m		3.077
PARTY'S NAME	DIGITAL JUICE ANIMATIONS PVT.LTD.,BANGALORE	DRAWING No.		SECTION No.
PARTY'S DRAWING No.	012411–001	P–10790		–
ALLOY & TEMPER	6063 T6	S2862		S2862
		28006		28006
DESCRIPTION	MISC. SECTION			