P–11140
S3026
28041

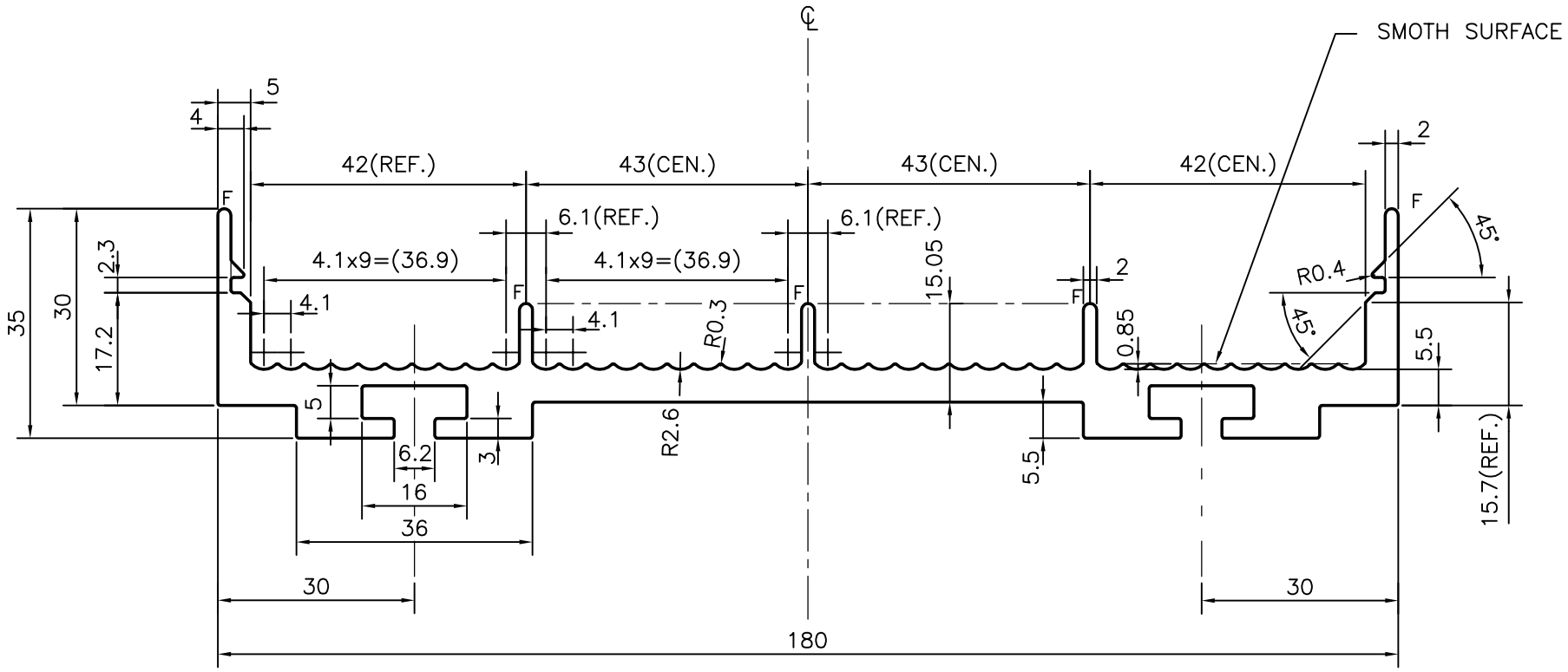

F = FULL RADIUS (5 PLACES)

JINDAL SYMBOL OF QUALITY AN ISO 9001 COMPANY	*JINDAL ALUMINIUM LTD.* *BANGALORE–560073 (INDIA)*		NAME	DATE
		DRAWN	J.P.KAUSHIK	30–07–2011
		CHECKED		
		APPROVED	S.S.GARG	09–08–2011
1. ALL DIMENSIONS ARE IN mm. 2. ROUND OFF ALL SHARP CORNERS WITH 0.40 mm. 3. TOLERANCES WILL BE AS PER BS:EN–755–9 UNLESS OTHERWISE SPECIFIED		SCALE		1:1
		AREA mm^2		1391.114
		PERIMETER mm.		626.268
		WEIGHT kg/m		3.756
PARTY'S NAME	ARECAZ ELECTRONICS, COIMBATORE	DRAWING No.		SECTION No.
PARTY'S DRAWING No.	200–280–100–1	P–11140		–
ALLOY & TEMPER	6063 T6	S3026		S3026
		28041		28041
DESCRIPTION	MISC. SECTION			