P-11661-4
S3272
28115

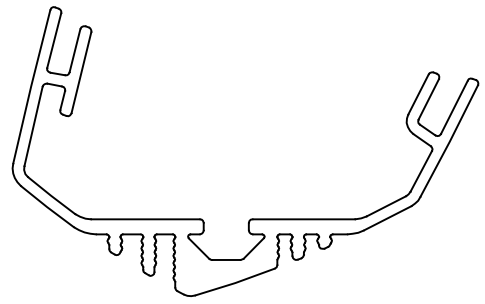

SCALE:- 1:1

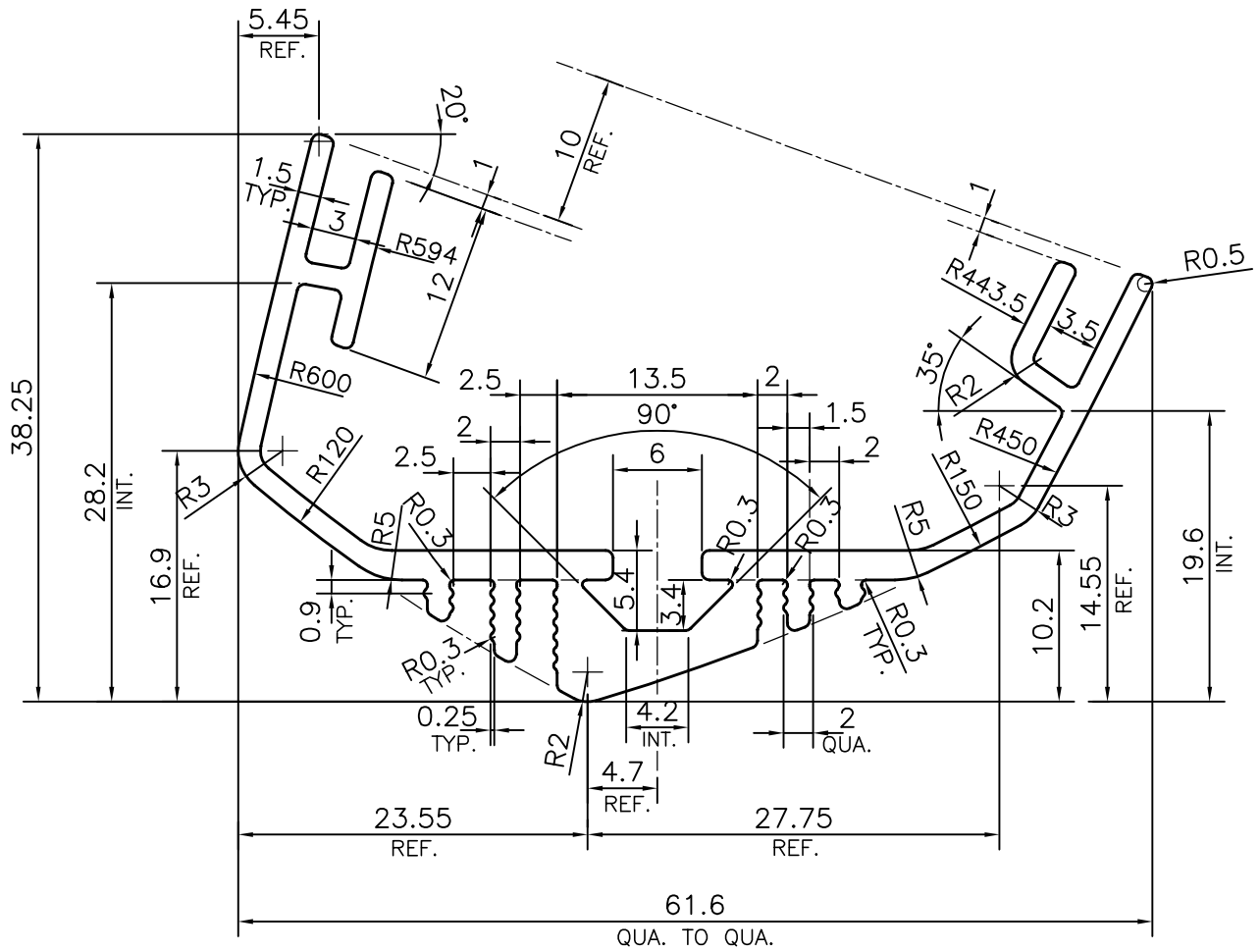

JINDAL SYMBOL OF QUALITY AN ISO 9001 COMPANY	*JINDAL ALUMINIUM LTD.* *BANGALORE-560073 (INDIA)*		NAME	DATE
		DRAWN	*PARVESH*	10-05-2012
		CHECKED		
		APPROVED	*R.G.PAREKH*	14-05-2012

1. ALL DIMENSIONS ARE IN mm.
2. ROUND OFF ALL SHARP CORNERS WITH 0.50 mm.
3. TOLERANCES WILL BE AS PER IS:3965-1981, UNLESS OTHERWISE SPECIFIED

SCALE	2:1
AREA mm^2	276.169
PERIMETER mm.	298.664
WEIGHT kg/m	0.746

PARTY'S NAME	VIGNANI SOLUTIONS PVT. LTD., BANGALORE
PARTY'S DRAWING No.	9180P00259 (AS PER REQUIREMENT)
ALLOY & TEMPER	6063 T6
DESCRIPTION	SIDE FRAME OF GRAVITY SECTION

DRAWING No.	SECTION No.
P-11661-4	-
S3272	S3272
28115	28115