P–11920
S3419
28128

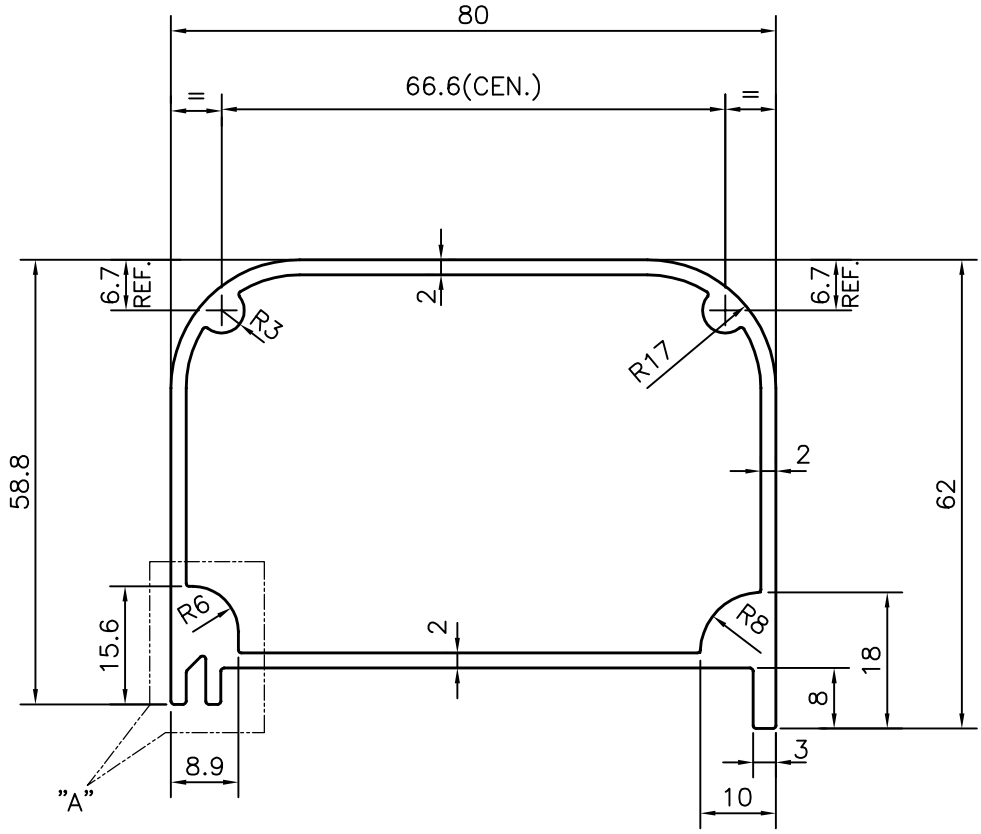

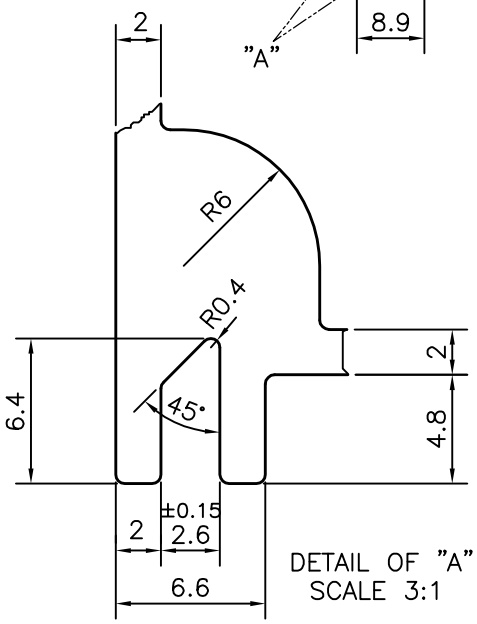

DETAIL OF "A"
SCALE 3:1

JINDAL SYMBOL OF QUALITY AN ISO 9001 COMPANY	*JINDAL ALUMINIUM LTD.* *BANGALORE–560073 (INDIA)*		NAME	DATE
		DRAWN	J.P.KAUSHIK	21–07–2012
		CHECKED		
		APPROVED	S.S.GARG	24–07–2012
1. ALL DIMENSIONS ARE IN mm. 2. ROUND OFF ALL SHARP CORNERS WITH 0.40 mm. 3. TOLERANCES WILL BE AS PER IS:6477–1983 UNLESS OTHERWISE SPECIFIED		SCALE		1:1
		AREA mm^2		669.405
		PERIMETER mm.		289.036
PARTY'S NAME	CONFIDENT DENTAL EQUIPMENTS LTD., BANGALORE	WEIGHT kg/m		1.807
		DRAWING No.		SECTION No.
PARTY'S DRAWING No.	PH354102	P–11920		–
		S3419		S3419
ALLOY & TEMPER	HE9 WP	28128		28128
DESCRIPTION	MISC. SECTION (LIGHT SIDE FRAME)			