P–12796–1
S3779
28181

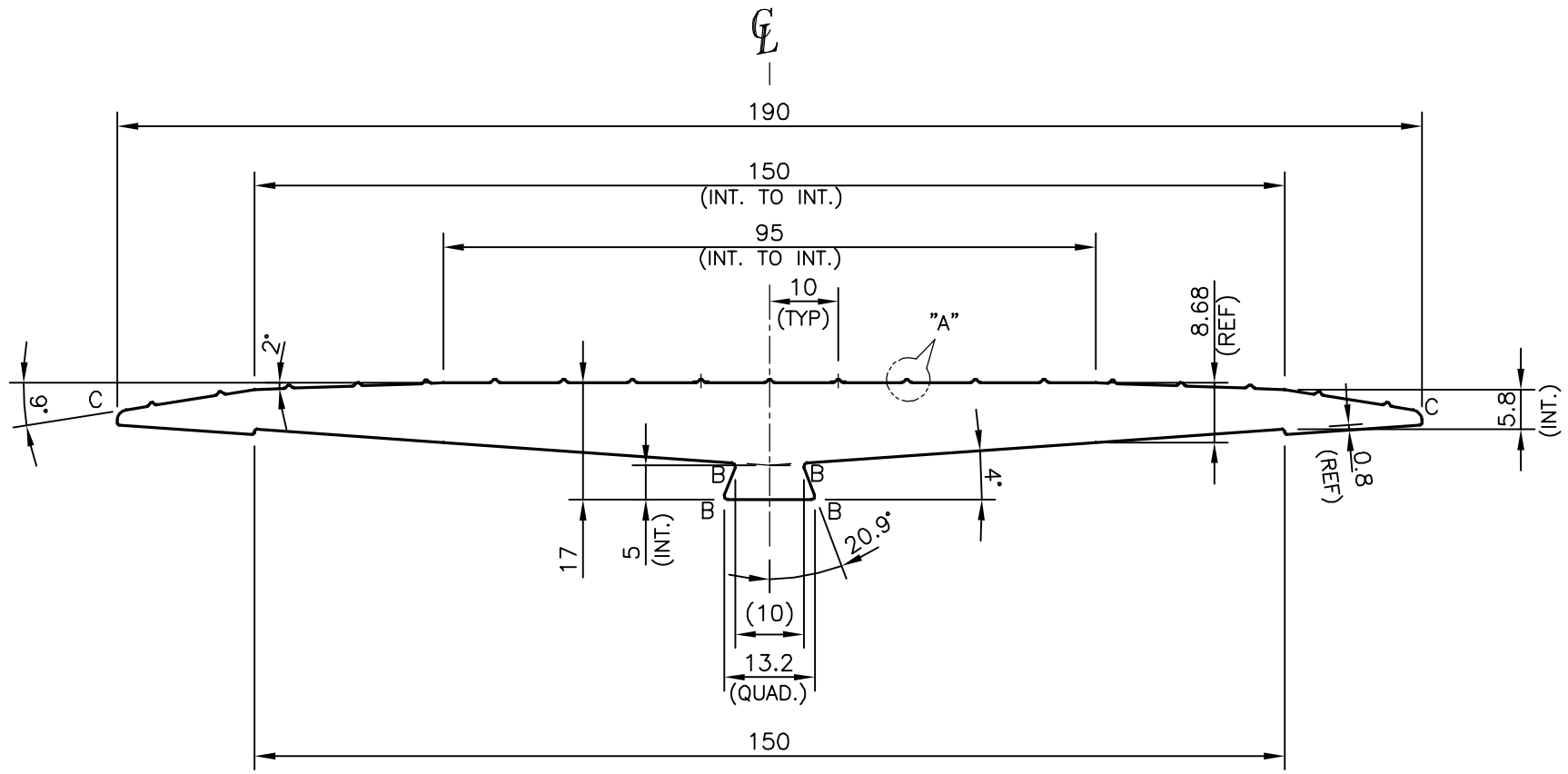

NO. OF PIPS = 19

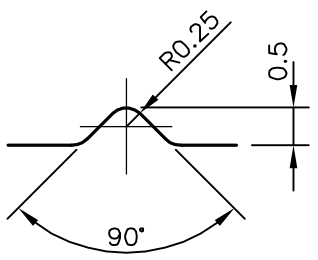

DETAILS OF "A"
SCALE 10:1

SECTION IS SYMETRICAL ABOUT ℄

B = 0.50 mm RADIUS (4 PLACES)
C = 1.50 mm RADIUS (2 PLACES)

TOLERANCES ON OVERALL WIDTHS & WIDTHS ACROSS FLATS OF BARS, & REGULAR SECTIONS			
UPTO 6.40mm – ±0.20	UPTO 32.0mm – ±0.38	UPTO 120.0mm – ±0.85	UPTO 320.00mm – ±1.70
UPTO 10.0mm – ±0.23	UPTO 50.0mm – ±0.46	UPTO 160.0mm – ±1.02	
UPTO 12.0mm – ±0.25	UPTO 60.0mm – ±0.53	UPTO 200.0mm – ±1.14	
UPTO 16.0mm – ±0.28	UPTO 80.0mm – ±0.69	UPTO 250.0mm – ±1.40	
UPTO 25.0mm – ±0.30	UPTO 100.0mm – ±0.75	UPTO 300.0mm – ±1.65	

JINDAL
SYMBOL OF QUALITY
AN ISO 9001 COMPANY

JINDAL ALUMINIUM LTD.
BANGALORE–560073 (INDIA)

	NAME	DATE
DRAWN	SRIVATHSA	22–05–2013
CHECKED		
APPROVED	S.S.GARG	04–06–2013

1. ALL DIMENSIONS ARE IN mm.
2. ROUND OFF ALL SHARP CORNERS WITH 0.30 mm.
3. TOLERANCES WILL BE AS PER IS:3965–1981 ,UNLESS OTHERWISE SPECIFIED

SCALE	1:1
AREA mm^2	1619.581
PERIMETER mm.	405.612
WEIGHT kg/m	4.373

PARTY'S NAME	TRISTAR GLOBAL INFRASTRUCTURE (P) LTD., NEW DELHI
PARTY'S DRAWING No.	TGIPL 751 ISSUE–A
ALLOY & TEMPER	6063 T6
DESCRIPTION	CENTRE PLATE SECTION

DRAWING No.	SECTION No.
P–12796–1	–
S3779	S3779
28181	28181