P–13320
S3996
28227

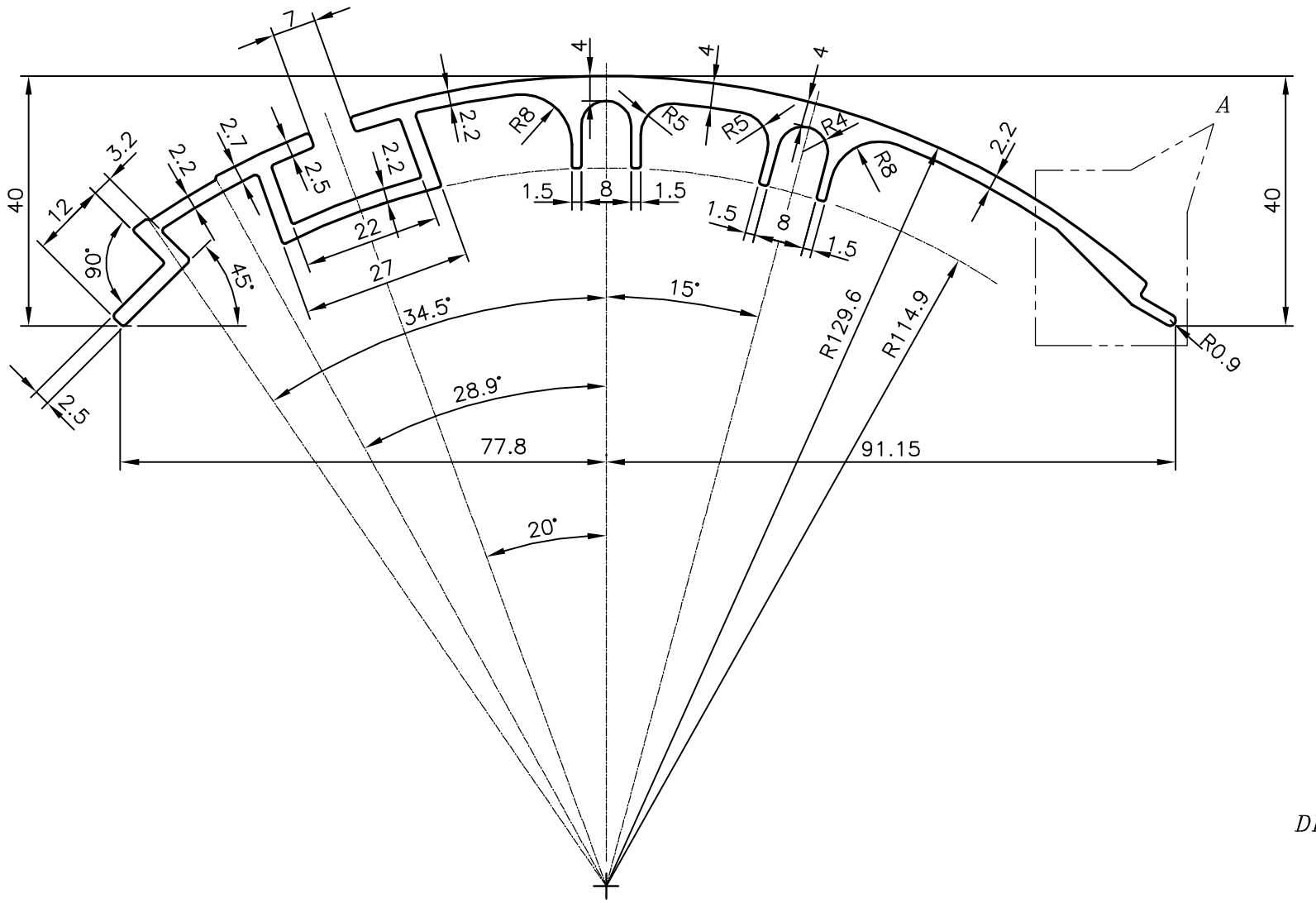

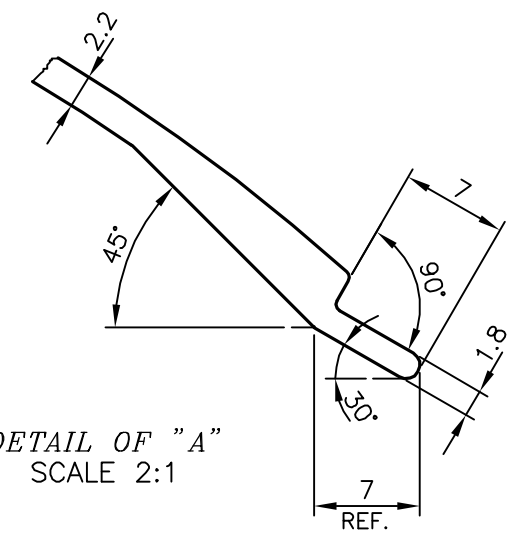

DETAIL OF "A"
SCALE 2:1

JINDAL SYMBOL OF QUALITY AN ISO 9001 COMPANY	*JINDAL ALUMINIUM LTD.* *BANGALORE–560073 (INDIA)*		NAME	DATE
		DRAWN	J.P.KAUSHIK	01–01–2014
		CHECKED		
		APPROVED	S.S.GARG	25–01–2014
1. ALL DIMENSIONS ARE IN mm. 2. ROUND OFF ALL SHARP CORNERS WITH 0.40 mm. 3. TOLERANCES WILL BE AS PER IS:3965–1981 UNLESS OTHERWISE SPECIFIED		SCALE		1:1
		AREA mm^2		777.445
		PERIMETER mm.		550.853
		WEIGHT kg/m		2.099
PARTY'S NAME	ALLWIN DIGITAL, AHMEDABAD	DRAWING No.		SECTION No.
PARTY'S DRAWING No.	AS PER DRAWING	P–13320		–
ALLOY & TEMPER	6005 T6	S3996		S3996
		28227		28227
DESCRIPTION	MISC. SECTION			