P–14006
S4254
28276

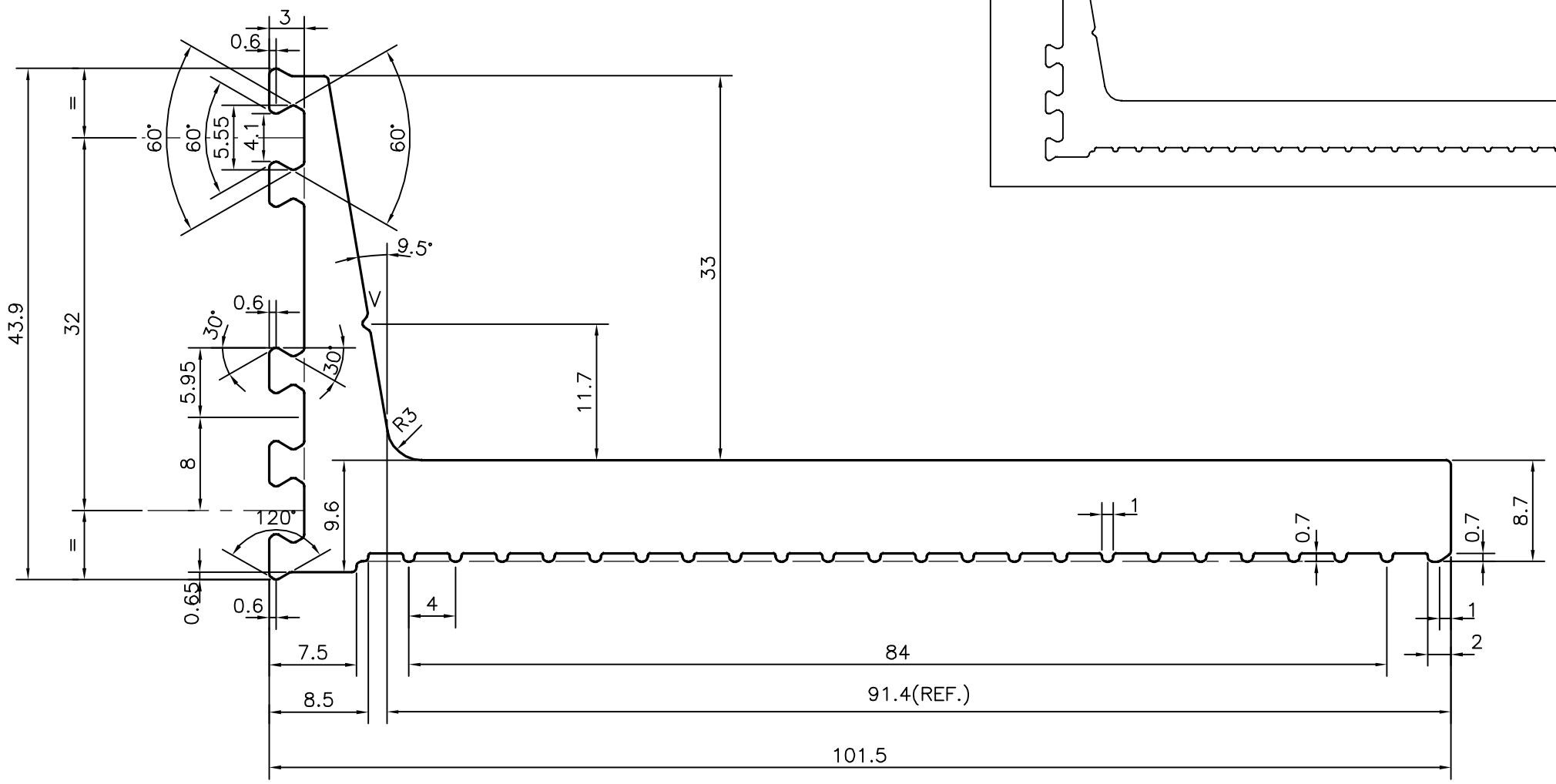

1:1

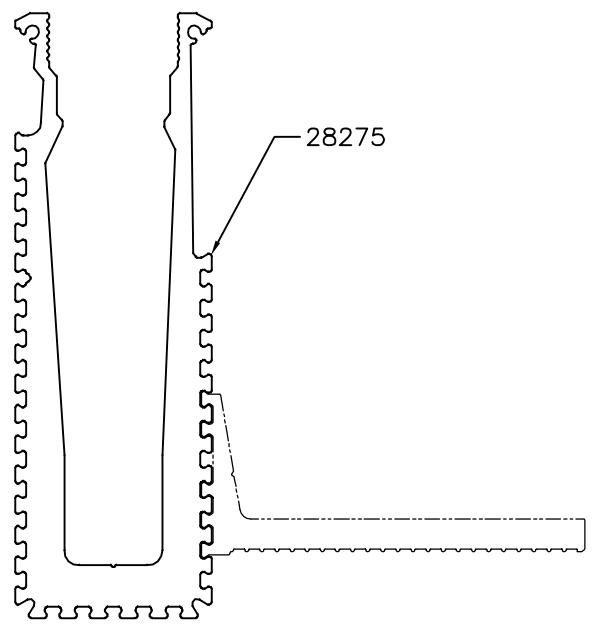

V = V GROOVE 0.6x90°

JINDAL SYMBOL OF QUALITY AN ISO 9001 COMPANY	*JINDAL ALUMINIUM LTD.* *BANGALORE–560073 (INDIA)*		NAME	DATE
		DRAWN	J.P.KAUSHIK	19–09–2014
		CHECKED		
		APPROVED	S.S.GARG	25–09–2014
1. ALL DIMENSIONS ARE IN mm. 2. ROUND OFF ALL SHARP CORNERS WITH 0.40 mm. 3. TOLERANCES WILL BE AS PER IS:3965–1981 UNLESS OTHERWISE SPECIFIED		SCALE		2:1
		AREA mm^2		1017.701
		PERIMETER mm.		329.494
		WEIGHT kg/m		2.748
PARTY'S NAME	31 STUDIO, PUNE	DRAWING No.		SECTION No.
PARTY'S DRAWING No.	AS PER DRAWING	P–14006		–
ALLOY & TEMPER	6063 T6	S4254		S4254
		28276		28276
DESCRIPTION	MISC. SECTION			