P-15876-1
S5084
28340

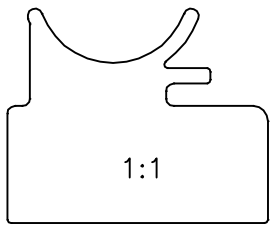

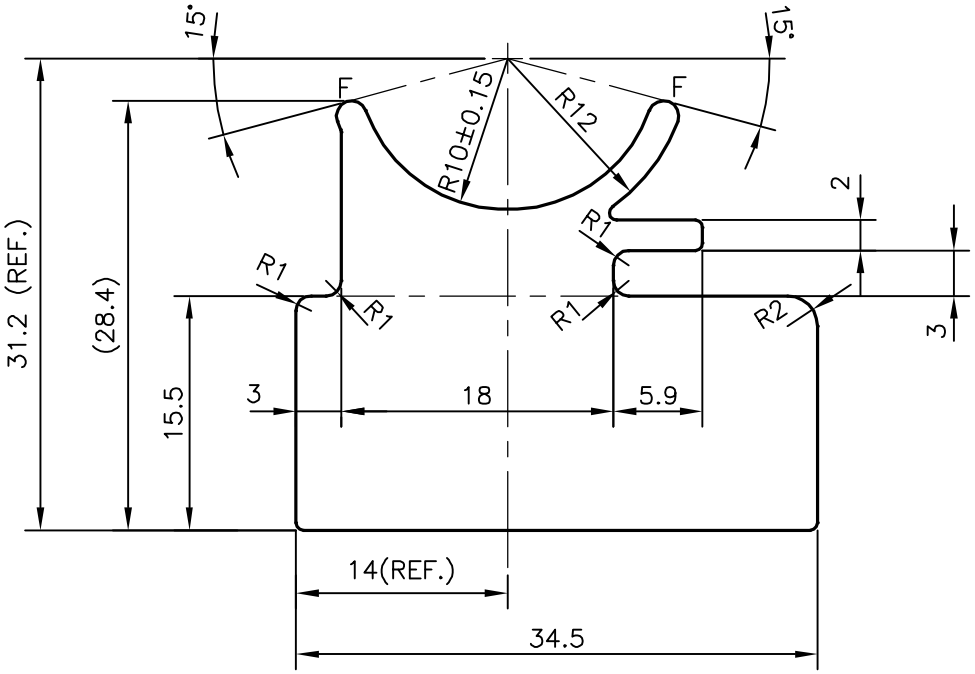

UNSPECIFIED RADIUS 0.5 mm

F = FULL RADIUS (2 PLACES)

JINDAL SYMBOL OF QUALITY AN ISO 9001 COMPANY	*JINDAL ALUMINIUM LTD.* *BANGALORE-560073 (INDIA)*		NAME	DATE
		DRAWN	J.P.KAUSHIK	16-08-2016
		CHECKED		
		APPROVED	S.S. GARG	24-09-2016
1. ALL DIMENSIONS ARE IN mm. 2. ROUND OFF ALL SHARP CORNERS WITH 0.40 mm. 3. TOLERANCES WILL BE AS PER IS:3965-1981 UNLESS OTHERWISE SPECIFIED		SCALE		2:1
		AREA mm^2		696.238
		PERIMETER mm.		145.866
PARTY'S NAME	WONJIN AUTOPARTS INDIA PVT. LTD., MARAMALAI NAGAR	WEIGHT kg/m		1.880
		DRAWING No.		SECTION No.
PARTY'S DRAWING No.	AS PER AutoCAD DRAWING-PLF742HWFAB01 000	P-15876-1		–
ALLOY & TEMPER	6005 T5	S5084		S5084
		28340		28340
DESCRIPTION	JOINT FLANGE SECTION			