P−15461−1
S4821
28353

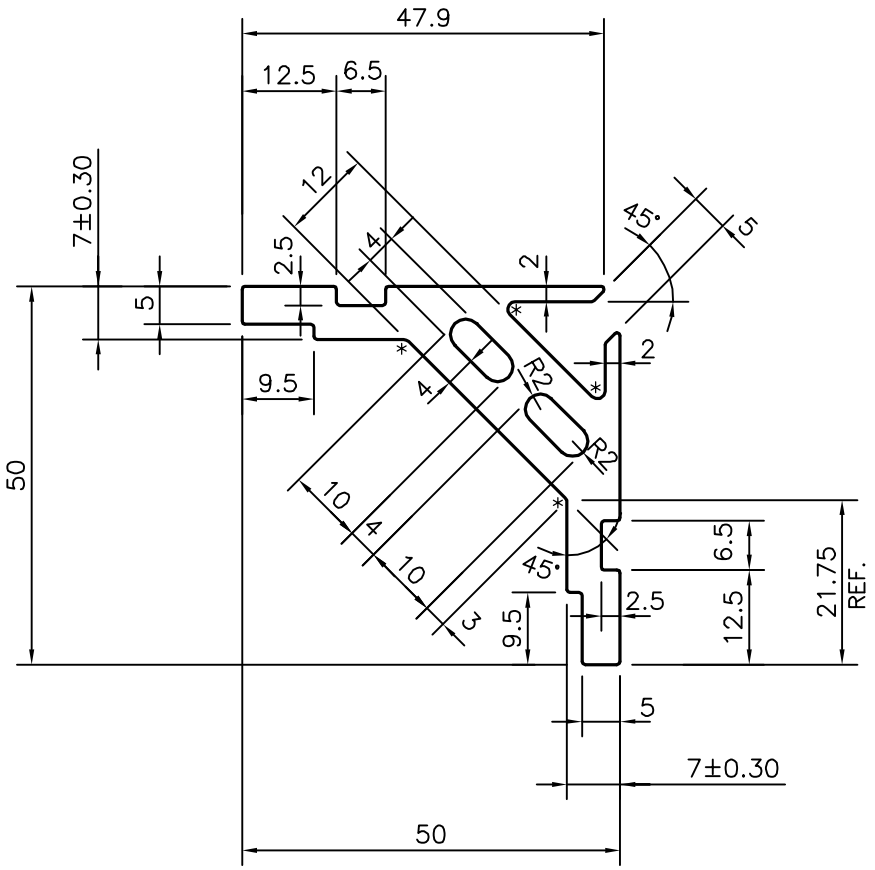

1. STRAIGHTNESS=1.7mm/M
2. TWIST=1.7mm/M

* = 1.0 RADIUS(4 PLACES)

SYMBOL OF QUALITY AN ISO 9002 COMPANY	*JINDAL ALUMINIUM LTD.* *BANGALORE−560073 (INDIA)*		NAME	DATE
		DRAWN	J.P.KAUSHIK	31−12−2015
		CHECKED		
		APPROVED	S.S.GARG	08−01−2016
1. ALL DIMENSIONS ARE IN mm. 2. ROUND OFF ALL SHARP CORNERS WITH 0.40 mm. 3. TOLERANCES WILL BE AS PER IS:6477−1983 UNLESS OTHERWISE SPECIFIED		SCALE		1:1
		AREA mm^2		619.031
		PERIMETER mm.		228.03
		WEIGHT kg/m		1.671
PARTY'S NAME	BRAHMA 3, BANGALORE	DRAWING No.		SECTION No.
PARTY'S DRAWING No.	AS PER AutoCAD DRAWING & OUR PROPOSAL	P−15461−1		−
ALLOY & TEMPER	HE9 WP	S4821		S4821
		28353		28353
DESCRIPTION	MISC. SECTION			