P−15718
X1999
28451

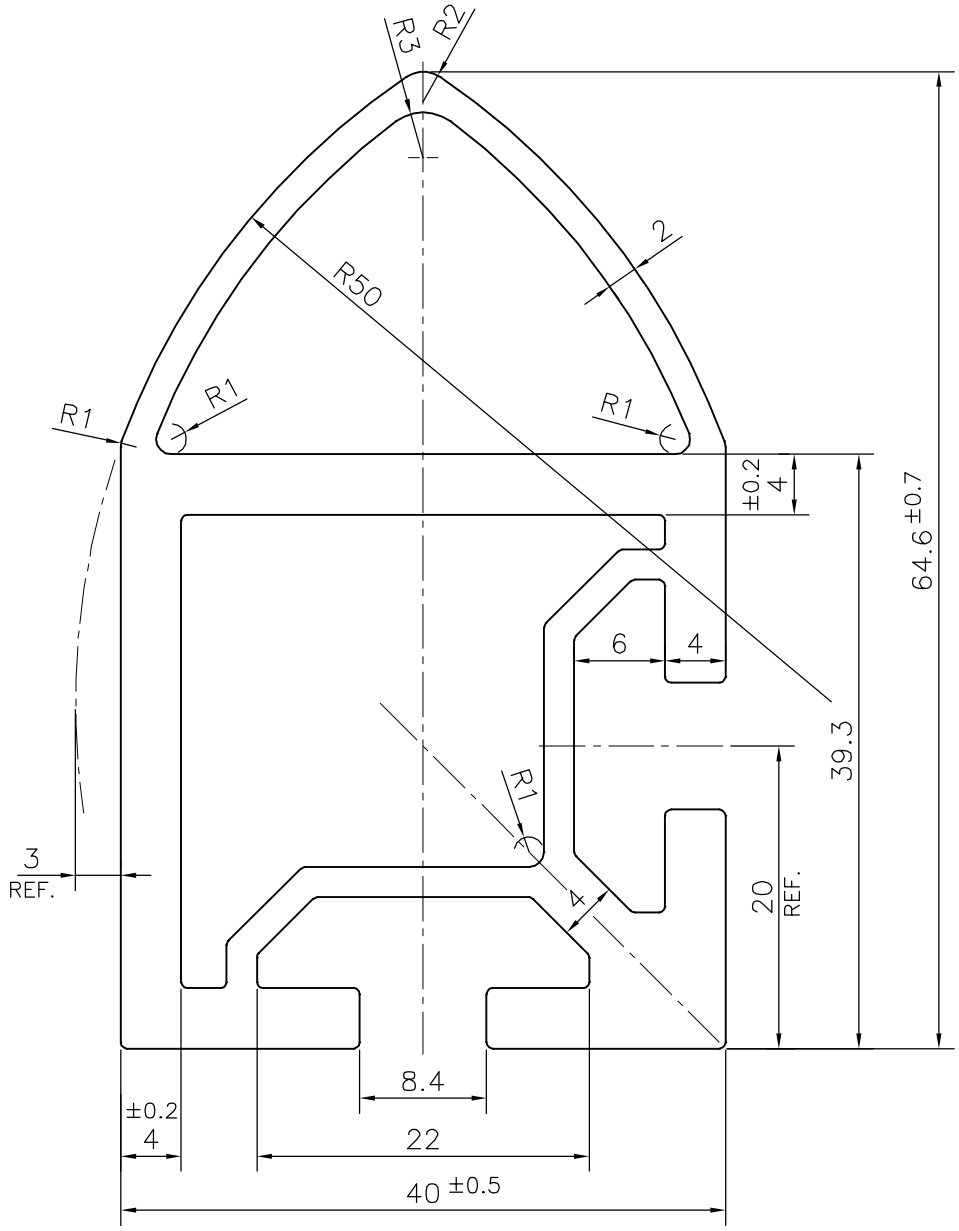

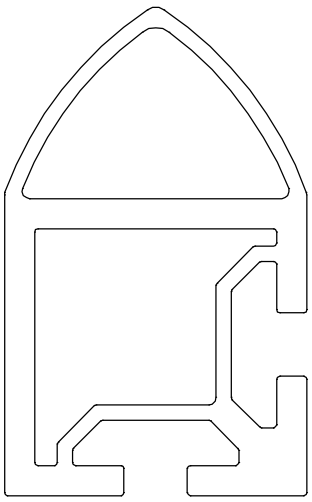

SCALE:− 1:1

1. STRAIGHTNESS=1.0mm/M
2. TWIST=1.0mm/M
3. ANGULARITY= ±2°
4. FLATNESS =0.007xWIDTH

SYMBOL OF QUALITY
AN ISO 9001 COMPANY

JINDAL ALUMINIUM LTD.

BANGALORE−560073 (INDIA)

	NAME	DATE
DRAWN	*PARVESH*	25−03−2016
CHECKED		
APPROVED	S.S. GARG	20−04−2016

1. ALL DIMENSIONS ARE IN mm.
2. ROUND OFF ALL SHARP CORNERS WITH 0.40 mm.
3. TOLERANCES WILL BE AS PER IS:6477−1983 , UNLESS OTHERWISE SPECIFIED

SCALE	2:1
AREA mm^2	771.742
PERIMETER mm.	267.738
WEIGHT kg/m	2.084

PARTY'S NAME	JARRA CNC PRODUCTS, HOSUR
PARTY'S DRAWING No.	AS PER AUTOCAD DRAWING−005−0995
ALLOY & TEMPER	6063 T5
DESCRIPTION	INDUSTRIAL SECTION−CONTROL UNIT FRAME BOTTOM PROFILE

DRAWING No.	SECTION No.
P−15718	−
X1999	X1999
28451	28451