P−21199−1
28512

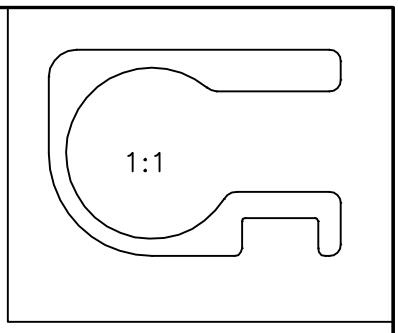

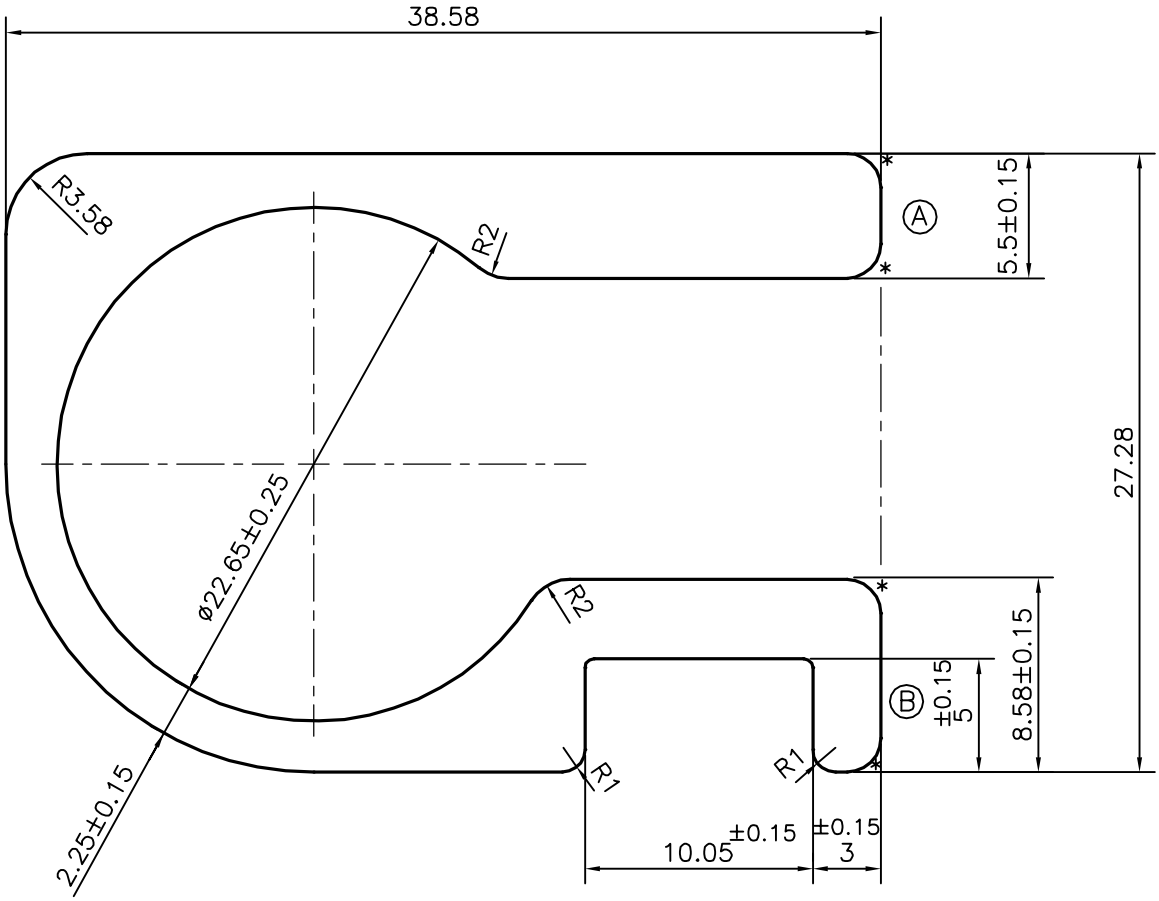

DATUM A & B SHOULD BE COINCIDENT WITHIN±0.15 mm

* = RADIUS 1.5 (4 PLACES)

JINDAL SYMBOL OF QUALITY AN ISO 9001 COMPANY	*JINDAL ALUMINIUM LTD.* *BANGALORE−560073 (INDIA)*		NAME	DATE
		DRAWN	J.P.KAUSHIK	20−07−2020
		CHECKED		
		APPROVED	B.NATARAJA	28−07−2020
1. ALL DIMENSIONS ARE IN mm. 2. ROUND OFF ALL SHARP CORNERS WITH 0.40 mm. 3. TOLERANCES WILL BE AS PER IS:3965−1981 , UNLESS OTHERWISE SPECIFIED		SCALE		3:1
		AREA mm^2		361.83
		PERIMETER mm.		205.808
		WEIGHT kg/m		0.977
PARTY'S NAME	THE REGISTRAR, CHENNAI	DRAWING No.		SECTION No.
PARTY'S DRAWING No.	NF2AJ0300CV02R02 REV. R02	P−21199−1		−
ALLOY & TEMPER	6061 T6	28512		28512
DESCRIPTION	FR−BOTTOM CLAMP SECTION			