P-21349-1

28521

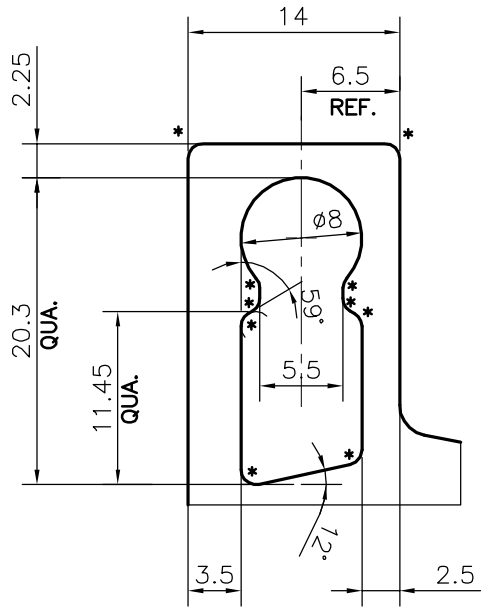

SCALE:- 2:1
DETAIL OF "C"

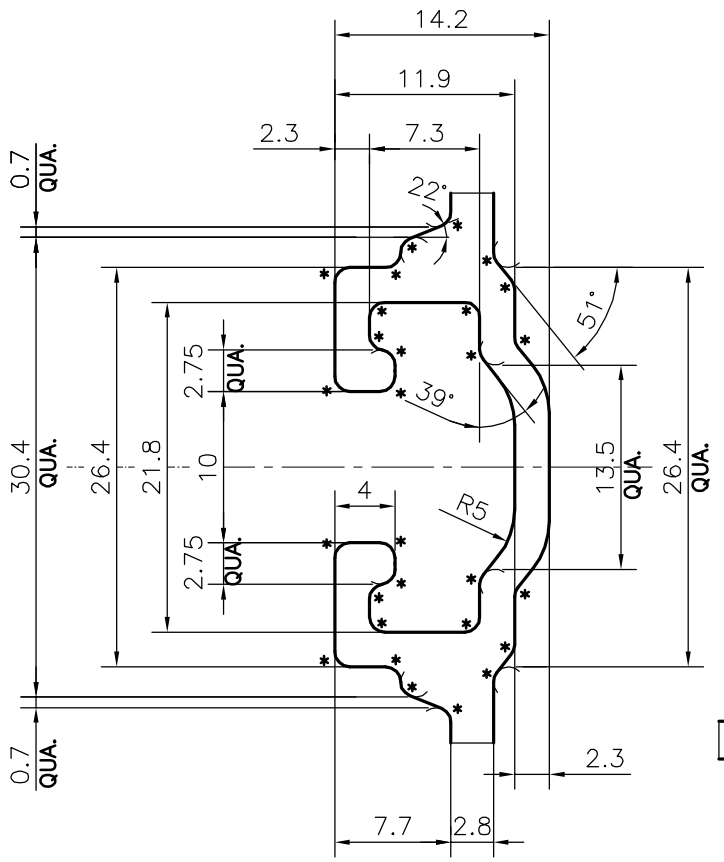

SCALE:- 2:1
DETAIL OF "B"

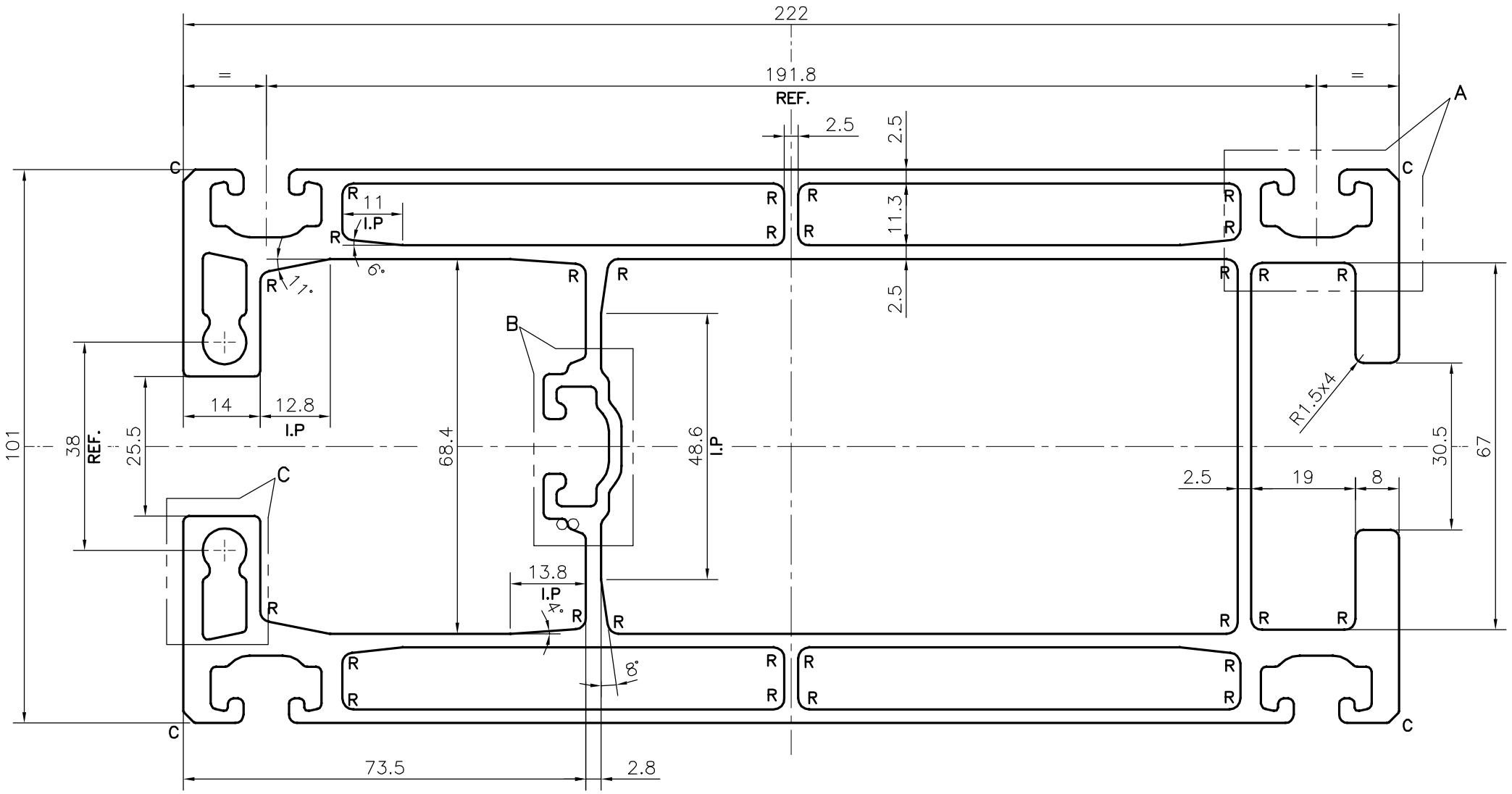

SCALE:- 1:1

R = 2 mm RADIUS (28 PLACES)
* = 1 mm RADIUS (88 PLACES)
C = CHAMFER 2x45° (4 PLACES)

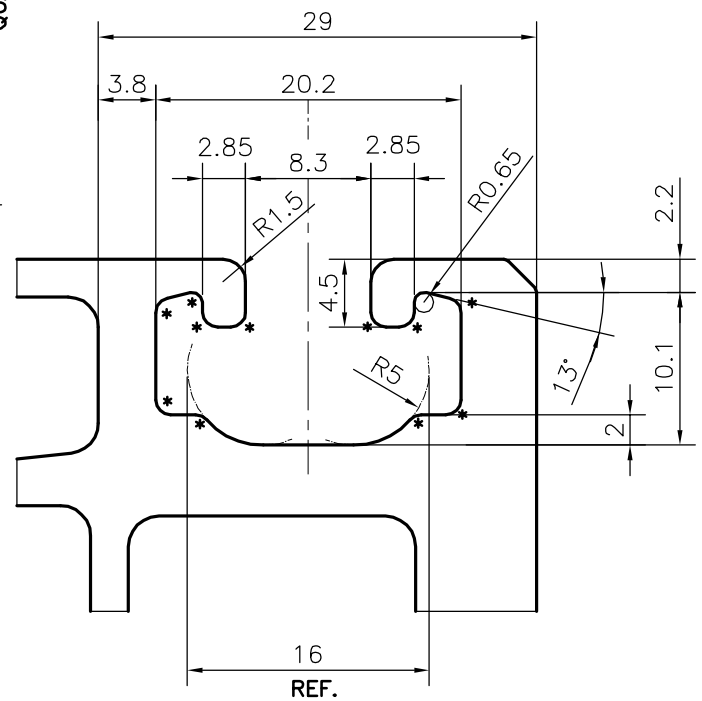

SCALE:- 2:1
DETAIL OF "A"

TOLERANCES ON OVERALL WIDTHS & WIDTHS ACROSS FLATS OF BARS, & REGULAR SECTIONS			
UPTO 6.40mm – ±0.20	UPTO 32.0mm – ±0.38	UPTO 120.0mm – ±0.85	1. STRAIGHTNESS=1.7mm/M
UPTO 10.0mm – ±0.23	UPTO 50.0mm – ±0.46	UPTO 160.0mm – ±1.02	2. TWIST=1.7mm/M
UPTO 12.0mm – ±0.25	UPTO 60.0mm – ±0.53	UPTO 200.0mm – ±1.14	3. ANGULARITY= ±2°
UPTO 16.0mm – ±0.28	UPTO 80.0mm – ±0.69	UPTO 250.0mm – ±1.40	4. FLATNESS =0.007xWIDTH
UPTO 25.0mm – ±0.30	UPTO 100.0mm – ±0.75	UPTO 300.0mm – ±1.65	

JINDAL
SYMBOL OF QUALITY
AN ISO 9001 COMPANY

JINDAL ALUMINIUM LTD.
BANGALORE-560073 (INDIA)

	NAME	DATE
DRAWN	DARPAN	03-09-2020
CHECKED		
APPROVED	B.NATARAJA	09-09-2020

1. ALL DIMENSIONS ARE IN mm.
2. ROUND OFF ALL SHARP CORNERS WITH 0.40 mm.
3. TOLERANCES WILL BE AS PER **IS:6477-1983** UNLESS OTHERWISE SPECIFIED

SCALE	1:1
AREA mm^2	4009.400
PERIMETER mm.	1236.445
WEIGHT kg/m	10.825

PARTY'S NAME	SPARKLINE EQUIPMENTS PVT. LTD., PUNE
PARTY'S DRAWING No.	17204002
ALLOY & TEMPER	6063 T6
DESCRIPTION	RAIL SECTION

DRAWING No.	SECTION No.
P-21349-1	–
28521	28521