P−18149−1
S5802
28538

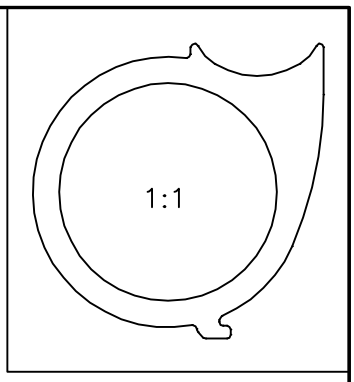

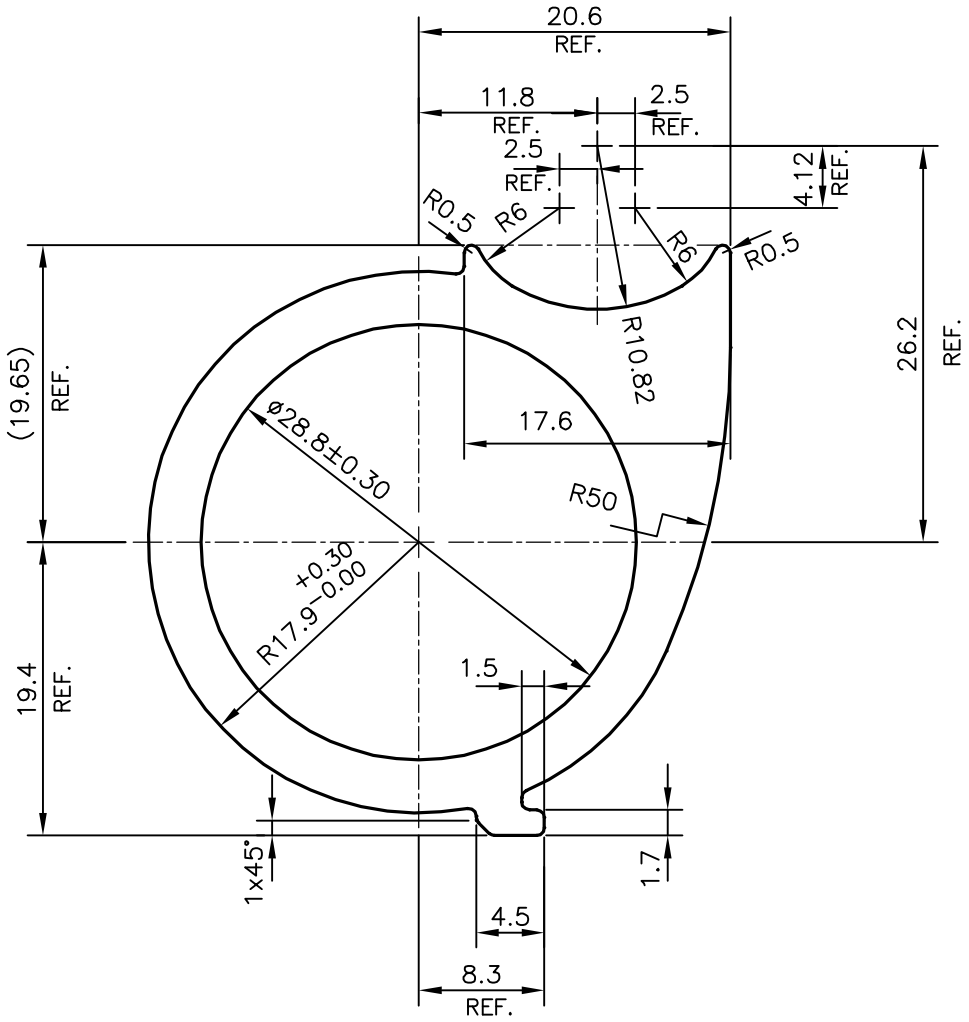

UNSPECIFIED RADIUS 0.5 mm

JINDAL SYMBOL OF QUALITY AN ISO 9001 COMPANY	*JINDAL ALUMINIUM LTD.* *BANGALORE−560073 (INDIA)*		NAME	DATE
		DRAWN	J.P.KAUSHIK	30−04−2018
		CHECKED		
		APPROVED	*B.NATARAJA*	30−04−2018
1. ALL DIMENSIONS ARE IN mm. 2. ROUND OFF ALL SHARP CORNERS WITH 0.40 mm. 3. TOLERANCES WILL BE AS PER IS:6477−1983 , UNLESS OTHERWISE SPECIFIED		SCALE		2:1
		AREA mm^2		457.125
		PERIMETER mm.		135.158
		WEIGHT kg/m		1.234
PARTY'S NAME	SHUBHANGAD INDUSTRIES, PUNE	DRAWING No.		SECTION No.
PARTY'S DRAWING No.	A35X101 REV−0001	P−18149−1		−
ALLOY & TEMPER	3103 T6	S5802		S5802
		28538		28538
DESCRIPTION	MISC. SECTION			