P-21512-1

28560

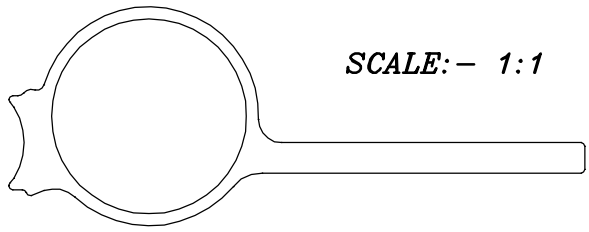

SCALE:- 1:1

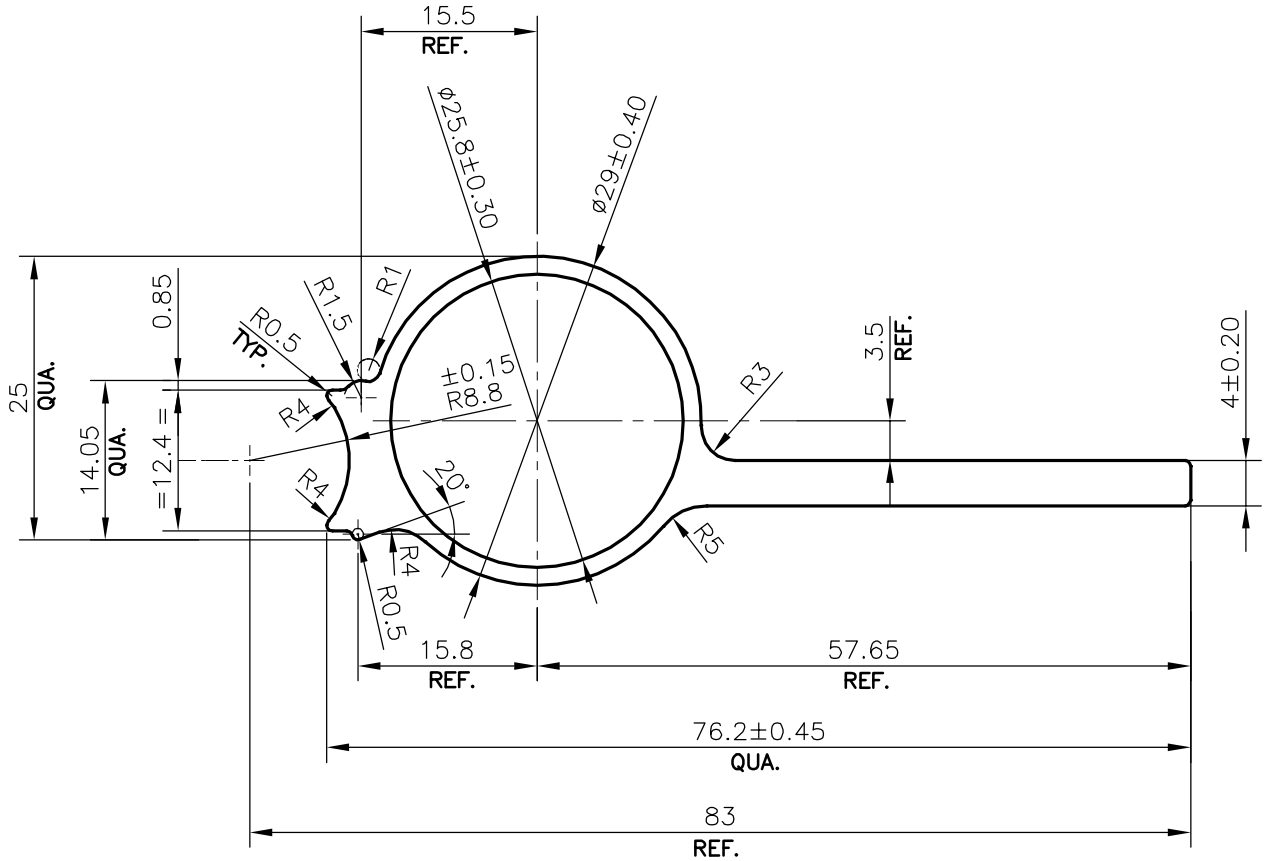

SCALE:- 1.5:1

RADIUS R0.5mm TYPICAL.

TOLERANCES ON OVERALL DIMENSIONS OF HOLLOW SECTIONS

UPTO 20.0mm - ±0.30	UPTO 80.0mm - ±0.70	UPTO 180.0mm - ±1.27	1. STRAIGHTNESS=1.7mm/M
UPTO 30.0mm - ±0.38	UPTO 100.0mm - ±0.80	UPTO 200.0mm - ±1.40	2. TWIST=1.7mm/M
UPTO 40.0mm - ±0.45	UPTO 120.0mm - ±0.90	UPTO 225.0mm - ±1.52	3. ANGULARITY= ±2°
UPTO 50.0mm - ±0.52	UPTO 140.0mm - ±1.00		4. FLATNESS =0.006xWIDTH
UPTO 60.0mm - ±0.60	UPTO 160.0mm - ±1.14		

JINDAL

SYMBOL OF QUALITY
AN ISO 9001 COMPANY

JINDAL ALUMINIUM LTD.

BANGALORE-560073 (INDIA)

	NAME	DATE
DRAWN	DARPAN	19-09-2020
CHECKED		
APPROVED	B.NATARAJA	30-09-2020

1. ALL DIMENSIONS ARE IN mm.
2. ROUND OFF ALL SHARP CORNERS WITH 0.40 mm.
3. TOLERANCES WILL BE AS PER IS:6477-1983 , UNLESS OTHERWISE SPECIFIED

SCALE	1.5:1
AREA mm^2	368.007
PERIMETER mm.	188.475
WEIGHT kg/m	0.994

PARTY'S NAME	YOONWOO AUTOMOTIVE INDIA PRIVATE LIMITED., PUNE
PARTY'S DRAWING No.	CF9VD01A
ALLOY & TEMPER	3103
DESCRIPTION	AUTOMOBILE SECTION

DRAWING No.	SECTION No.
P-21512-1	-
28560	28560