P–21549

28562

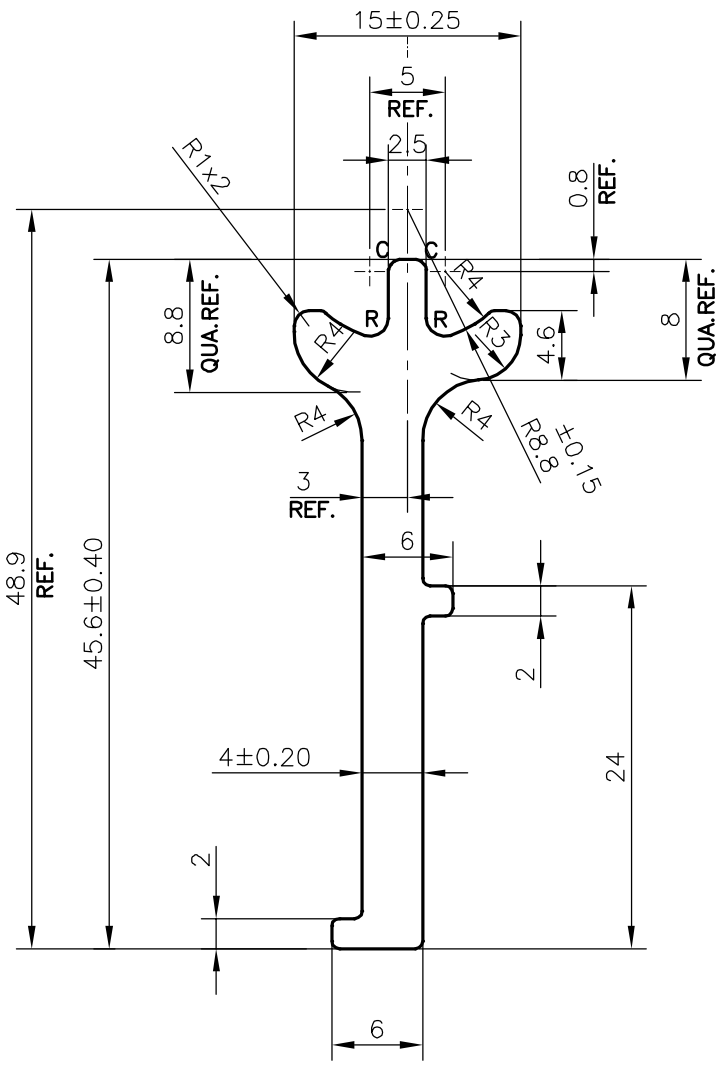

SCALE:– 2:1

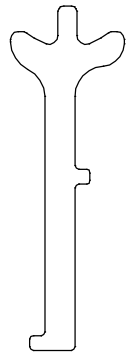

SCALE:– 1:1

WEIGHT RANGE (kg/m)– **0.554 – 0.678** (APPROX.)

RADIUS R0.5mm TYPICAL.

C = 0.5x45° CHAMFER (2 PLACES)
R = 1.2mm RADIUS (2 PLACES)

1) THE WELDING LINE IN THE EXPOSED SURFACE OF PROFILE IS UNAVOIDABLE. 2) PLEASE SPECIFY IMPORTANT SIZES. 3) PLEASE SPECIFY IF THIS PROFILE MATCHES WITH OTHER PROFILES. 4) PLEASE SPECIFY EXPOSED SURFACE,OTHER–WISE CONSIDERED AS NO EXPOSED SURFACE. 5) FINISH :– ☐ MILL FINISH / ☐ ANODIZING / ☐ POWDER COATING

TOLERANCES ON OVERALL WIDTHS & WIDTHS ACROSS FLATS OF BARS, & REGULAR SECTIONS

UPTO 6.40mm – ±0.20	UPTO 32.0mm – ±0.38	UPTO 120.0mm – ±0.85	1. STRAIGHTNESS=1.7mm/M
UPTO 10.0mm – ±0.23	UPTO 50.0mm – ±0.46	UPTO 160.0mm – ±1.02	2. TWIST=1.7mm/M
UPTO 12.0mm – ±0.25	UPTO 60.0mm – ±0.53	UPTO 200.0mm – ±1.14	3. ANGULARITY= ±2°
UPTO 16.0mm – ±0.28	UPTO 80.0mm – ±0.69	UPTO 250.0mm – ±1.40	4. FLATNESS =0.007xWIDTH
UPTO 25.0mm – ±0.30	UPTO 100.0mm – ±0.75	UPTO 300.0mm – ±1.65	

JINDAL

SYMBOL OF QUALITY
AN ISO 9001 COMPANY

JINDAL ALUMINIUM LTD.

BANGALORE–560073 (INDIA)

	NAME	DATE
DRAWN	DARPAN	22–09–2020
CHECKED		
APPROVED	B.NATARAJA	08–10–2020

1. ALL DIMENSIONS ARE IN mm.
2. ROUND OFF ALL SHARP CORNERS WITH 0.40 mm.
3. TOLERANCES WILL BE AS PER IS:3965–1981 , UNLESS OTHERWISE SPECIFIED

SCALE	2:1
AREA mm^2	228.293
PERIMETER mm.	123.516
WEIGHT kg/m	0.616

PARTY'S NAME	YOONWOO AUTOMOTIVE INDIA PRIVATE LIMITED., PUNE
PARTY'S DRAWING No.	CF9UL01A
ALLOY & TEMPER	6060 T66
DESCRIPTION	BRACKET RH TOP SECTION

DRAWING No.	SECTION No.
P–21549	–
28562	28562