P–18781
S6023
28594

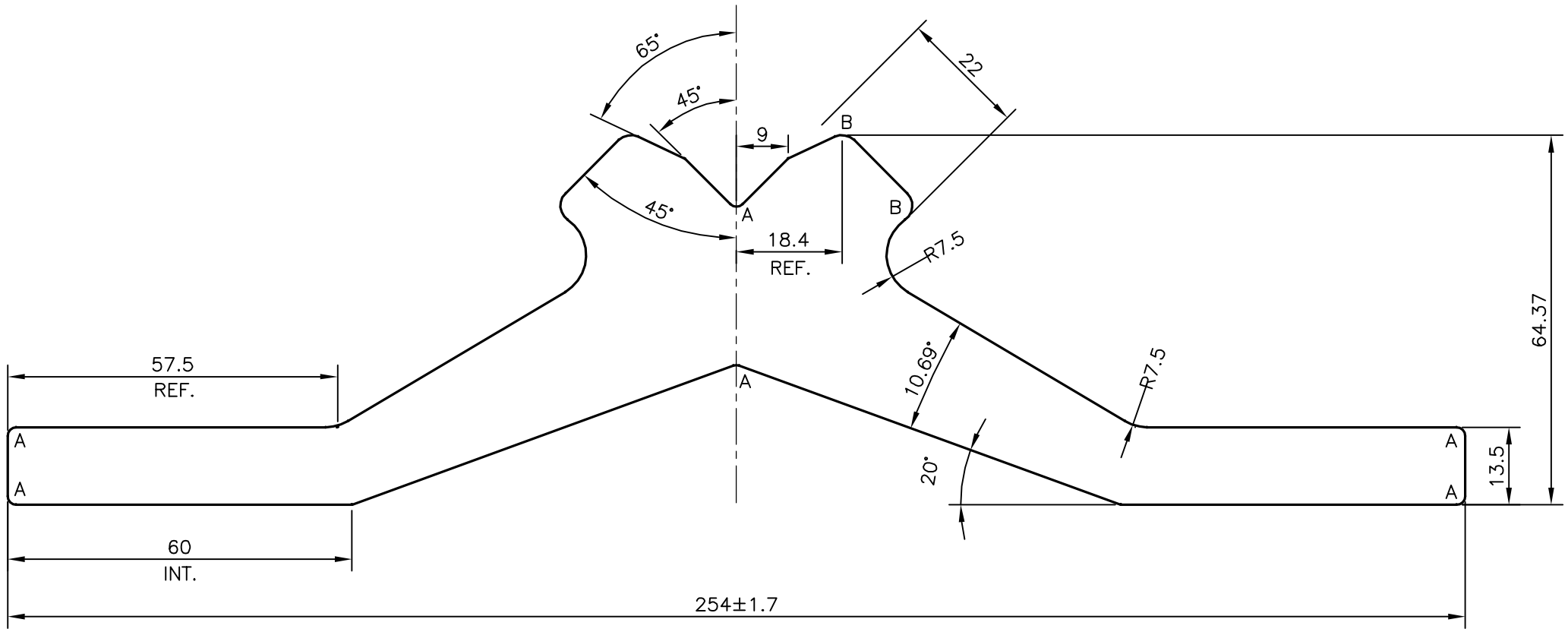

A= R1.5 mm,(6 PLACES)

B = R3 mm,(2 PLACES)

TOLERANCES ON OVERALL WIDTHS & WIDTHS ACROSS FLATS OF BARS, & REGULAR SECTIONS			
UPTO 6.40mm – ±0.20 UPTO 10.0mm – ±0.23 UPTO 12.0mm – ±0.25 UPTO 16.0mm – ±0.28 UPTO 25.0mm – ±0.30	UPTO 32.0mm – ±0.38 UPTO 50.0mm – ±0.46 UPTO 60.0mm – ±0.53 UPTO 80.0mm – ±0.69 UPTO 100.0mm – ±0.75	UPTO 120.0mm – ±0.85 UPTO 160.0mm – ±1.02 UPTO 200.0mm – ±1.14 UPTO 250.0mm – ±1.40 UPTO 300.0mm – ±1.65	UPTO 320.00mm – ±1.70

			NAME	DATE
SYMBOL OF QUALITY AN ISO 9001 COMPANY	*JINDAL ALUMINIUM LTD.* *BANGALORE–560073 (INDIA)*	DRAWN	DARPAN	20–10–2018
		CHECKED		
		APPROVED	B.NATARAJA	06–11–2018

1. ALL DIMENSIONS ARE IN mm.
2. ROUND OFF ALL SHARP CORNERS WITH 0.40 mm.
3. TOLERANCES WILL BE AS PER IS:3965–1981 , UNLESS OTHERWISE SPECIFIED

SCALE	1:1
AREA mm^2	5407.438
PERIMETER mm.	610.754
WEIGHT kg/m	14.600

		DRAWING No.	SECTION No.
PARTY'S NAME	APPEX INDUSTRIES, HARYANA		
PARTY'S DRAWING No.	CD 277002 1204	P–18781	–
ALLOY & TEMPER	6082 T6	S6023	S6023
DESCRIPTION	COUNTER SUPPORT PROFILE	28594	28594