P–1898
S217
7914
28606

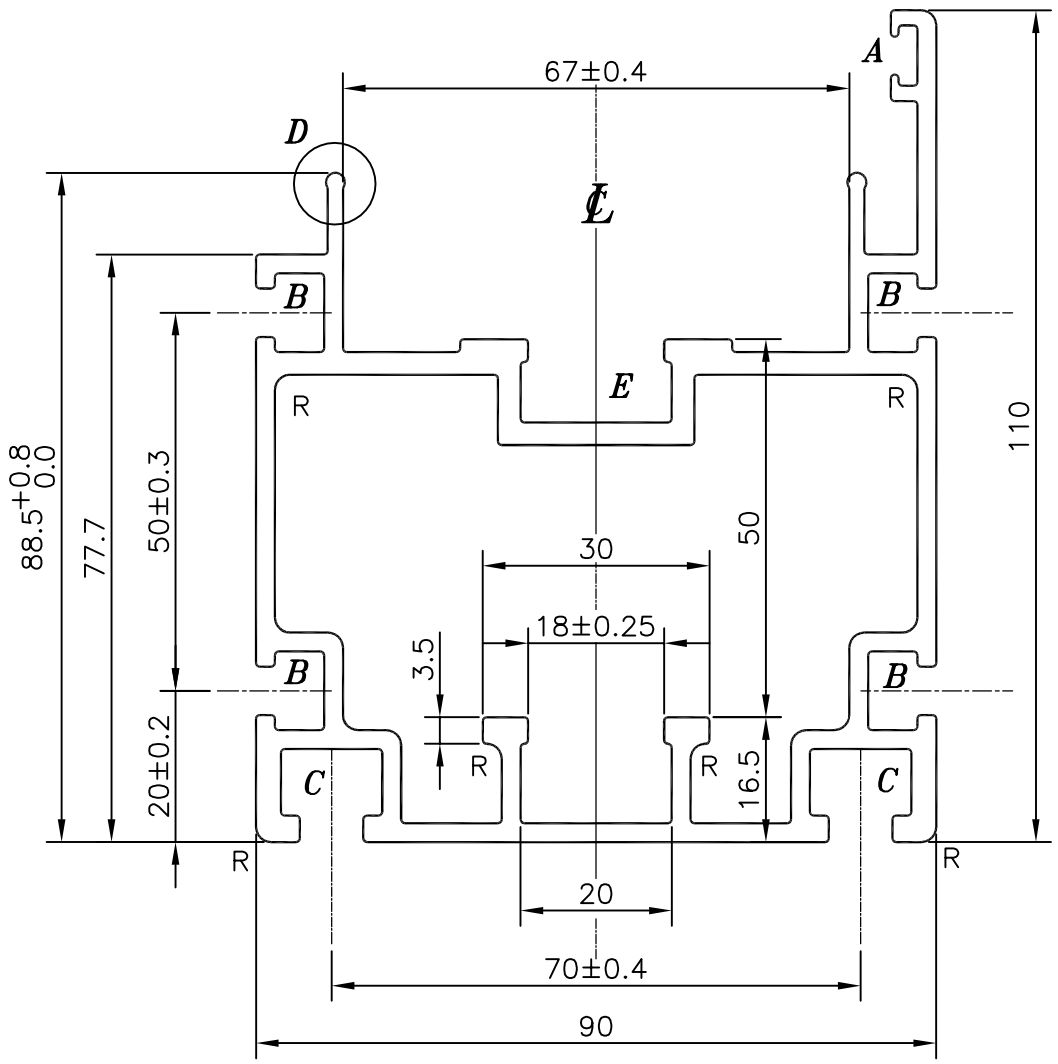

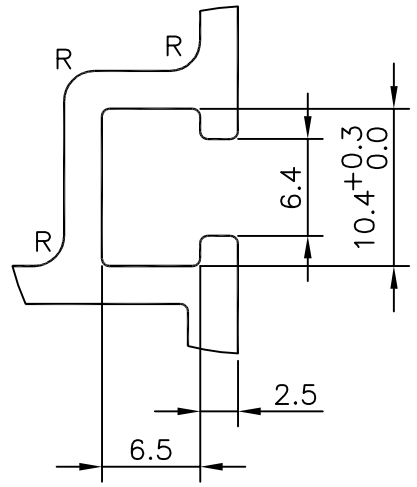

B (2:1)

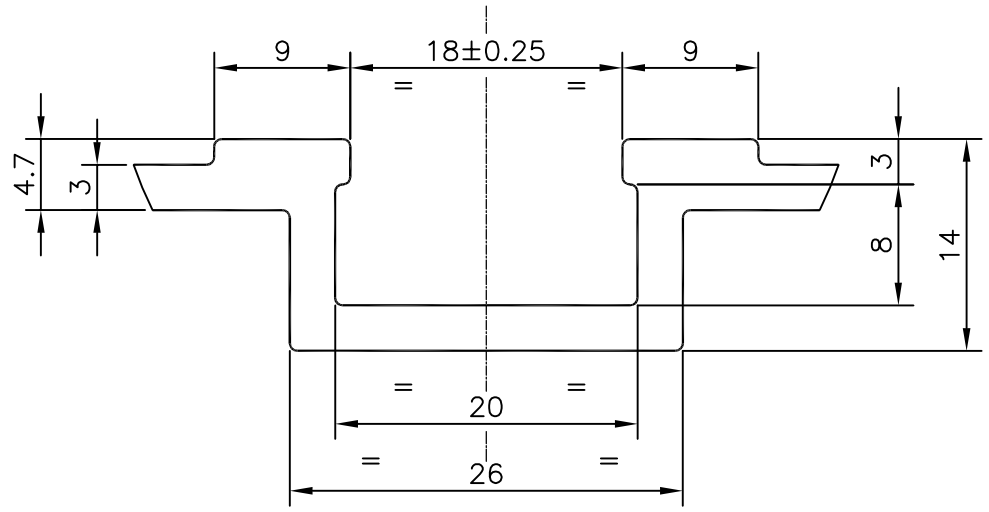

E (2:1)

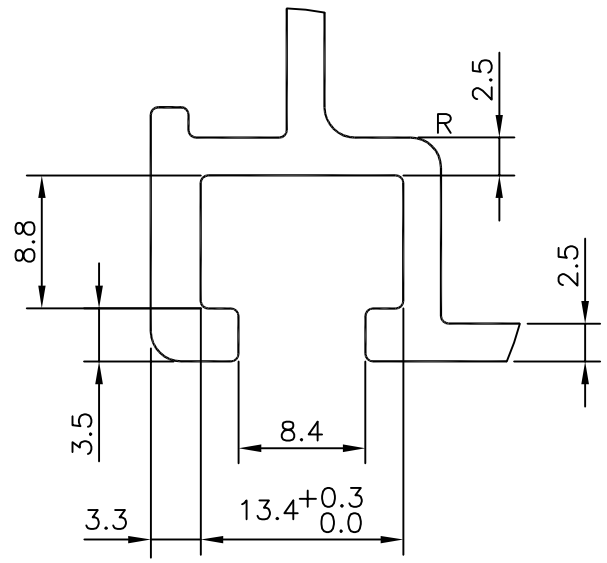

C (2:1)

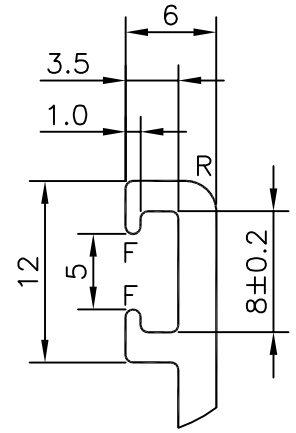

A (2:1)

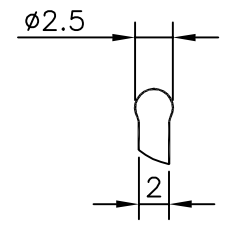

D (2:1)

1. ROUND OFF ALL SHARP CORNERS WITH 0.5 mm.
2. R = 2.0 RADIUS (14)
3. F = FULL RADIUS (2)
4. OUT SIDE SURFACE TO BE SMOOTH & FREE FROM DIE LINES
5. PRODUCT SHOULD BE FREE FROM SCRATCHES & BURRS
6. TWIST & BENDS SHOULD BE ≤ 1 mm./M.

JINDAL ALUMINIUM LTD.
BANGALORE–560073

1. ALL DIMENSIONS ARE IN mm.
2. ROUND OFF ALL SHARP CORNERS WITH 0.5 mm.
3. TOLERANCES WILL BE AS PER IS: 6477–1983 ,UNLESS OTHERWISE SPECIFIED

			NAME	DATE
		DRAWN	R.D. Sharma	22–04–98
		CHECKED		
		APPROVED		
PARTY'S NAME	AVASARALA AUTOMATION LTD., BANGALORE	SCALE	1:1 & 2:1	
PARTY'S DRAWING No.	305–08–061–3–R1	WEIGHT kg/m	3.856	
ALLOY & TEMPER	HE9 WP (Fe COMPOSITION ≤ 0.25 %)	SECTION No.	28606	
LENGTH	–	DRAWING No.	28606	
DESCRIPTION	EXTRUSION–DOUBLE PLUS			