P–6422
28847

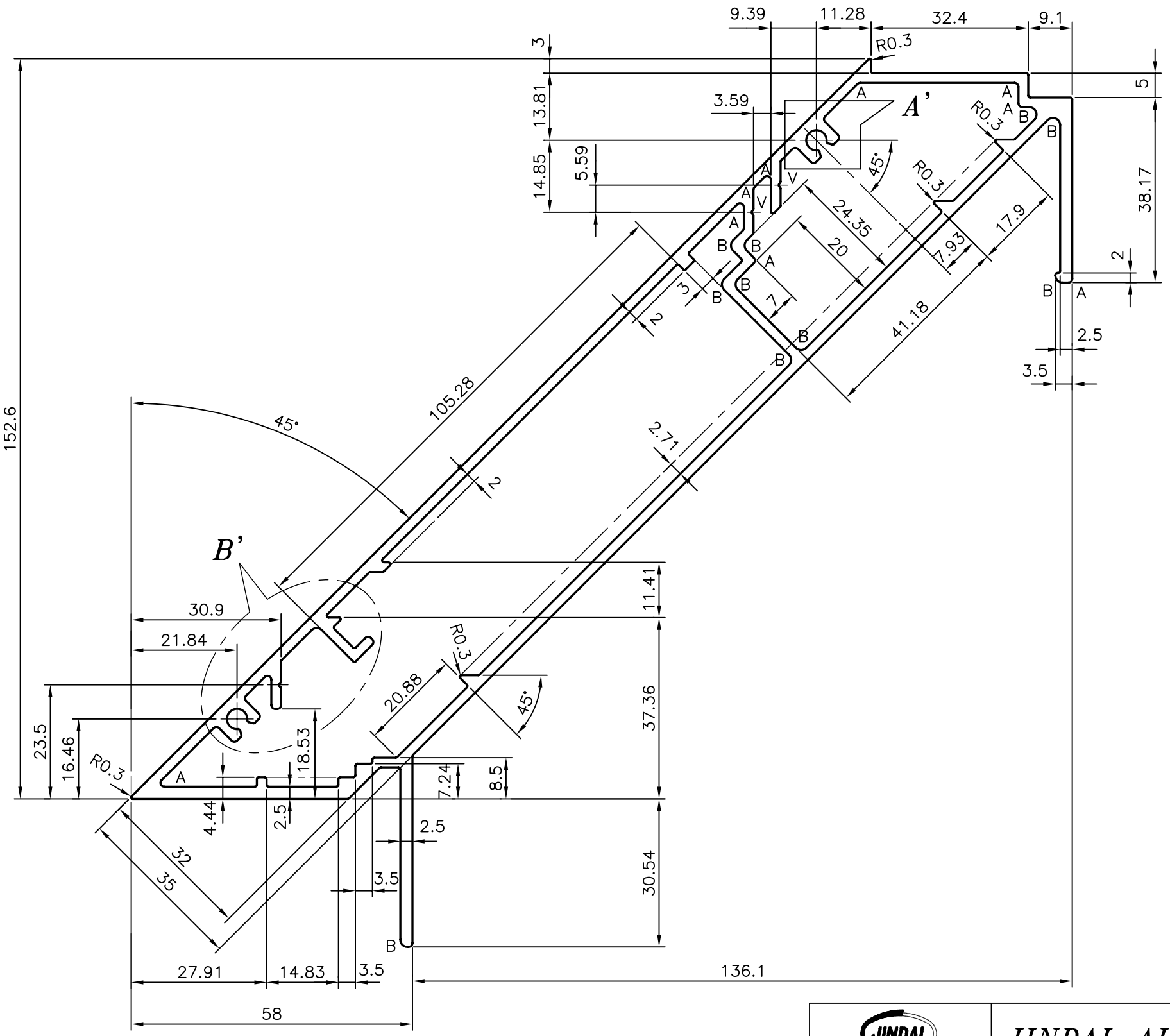

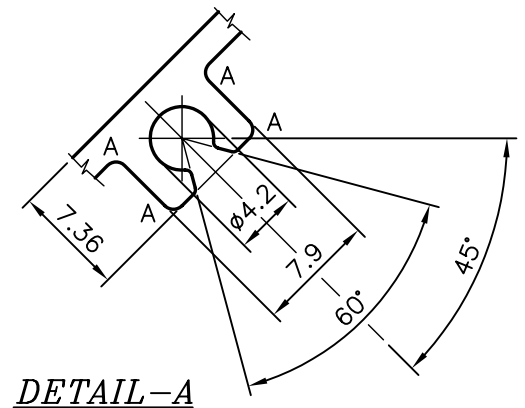

DETAIL–A
SCALE:–2:1

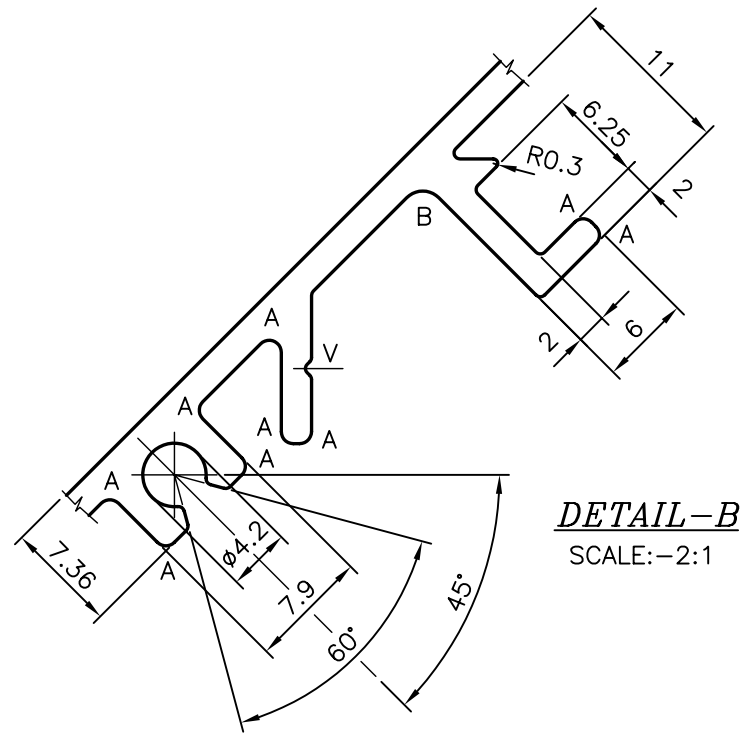

DETAIL–B
SCALE:–2:1

A = 0.80 mm RADIUS (22 PLACES)
B = 1.5 mm RADIUS (11 PLACES)
V = 0.4X90°XR0.4 (3 PLACES)
UNSPECIFIED THICKNESS – 2 mm

FLATNESS = ±0.006xW
TWIST = ±1.5°/M
STRAIGHTNESS = 1.7mm/M
ANGULARITY = ±1°

JINDAL
SYMBOL OF QUALITY
AN ISO 9001 COMPANY

JINDAL ALUMINIUM LTD.
BANGALORE–560073 (INDIA)

1. ALL DIMENSIONS ARE IN mm.
2. ROUND OFF ALL SHARP CORNERS WITH 0.40 mm.
3. TOLERANCES WILL BE AS PER IS:6477–1983 UNLESS OTHERWISE SPECIFIED

		NAME	DATE
DRAWN		MALINGAPPA	24–05–2006
CHECKED			
APPROVED			
SCALE			1:1
AREA mm^2			1479.922
PERIMETER mm.			663.243
WEIGHT kg/m			3.996

PARTY'S NAME	AL KARMA, NEW DELHI
PARTY'S DRAWING No.	TS–AL–155A
ALLOY & TEMPER	HE9 WP
DESCRIPTION	MISC. SECTION

DRAWING No.	SECTION No.
P–6422	–
28847	28847