P–6568
28849

* = RADIUS 1.0 mm (10 PLACES)
F = FULL RADIUS (2 PLACES)

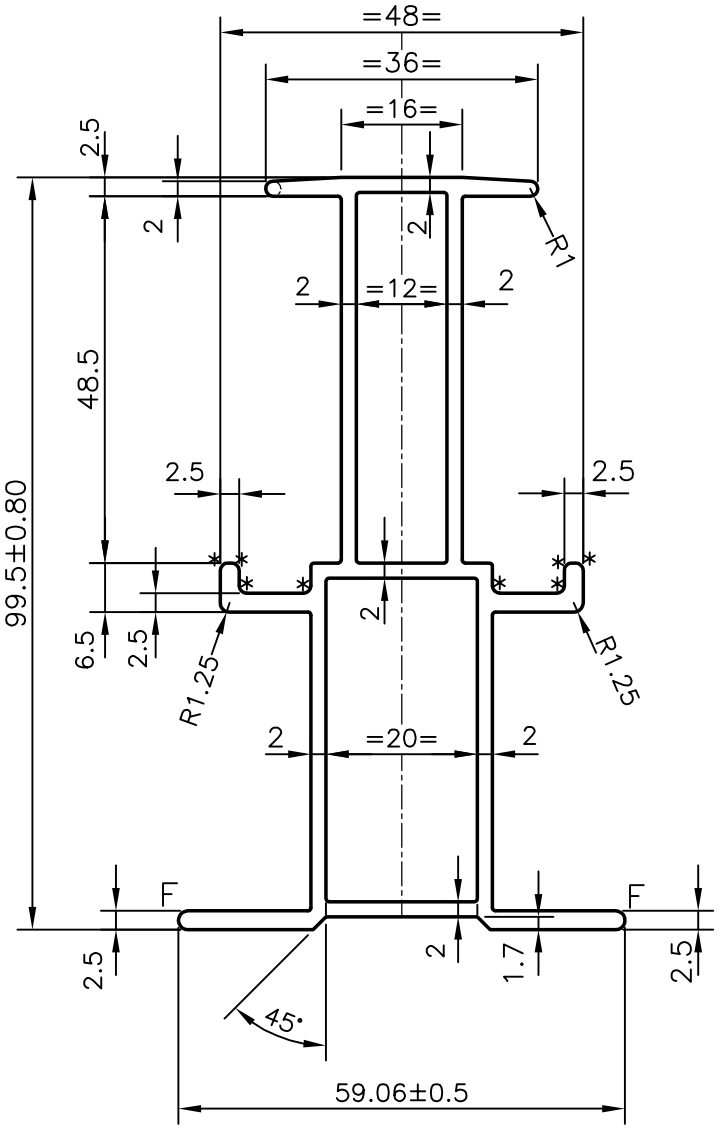

			NAME	DATE
JINDAL SYMBOL OF QUALITY AN ISO 9001 COMPANY	*JINDAL ALUMINIUM LTD.* *BANGALORE–560073 (INDIA)*	DRAWN	J.P.KAUSHIK	13–07–2006
		CHECKED		
		APPROVED		

1. ALL DIMENSIONS ARE IN mm.
2. ROUND OFF ALL SHARP CORNERS WITH 0.40 mm.
3. TOLERANCES WILL BE AS PER BS:1474–1987 UNLESS OTHERWISE SPECIFIED

SCALE	1:1
AREA mm^2	708.884
PERIMETER mm.	411.47
WEIGHT kg/m	1.914

PARTY'S NAME	KOREA COTTRESS CO. LTD. ,KOREA
PARTY'S DRAWING No.	60–800–095
ALLOY & TEMPER	6060 T6
DESCRIPTION	MISC. SECTION

DRAWING No.	SECTION No.
P–6568	–
28849	28849