P–6764–1
28909

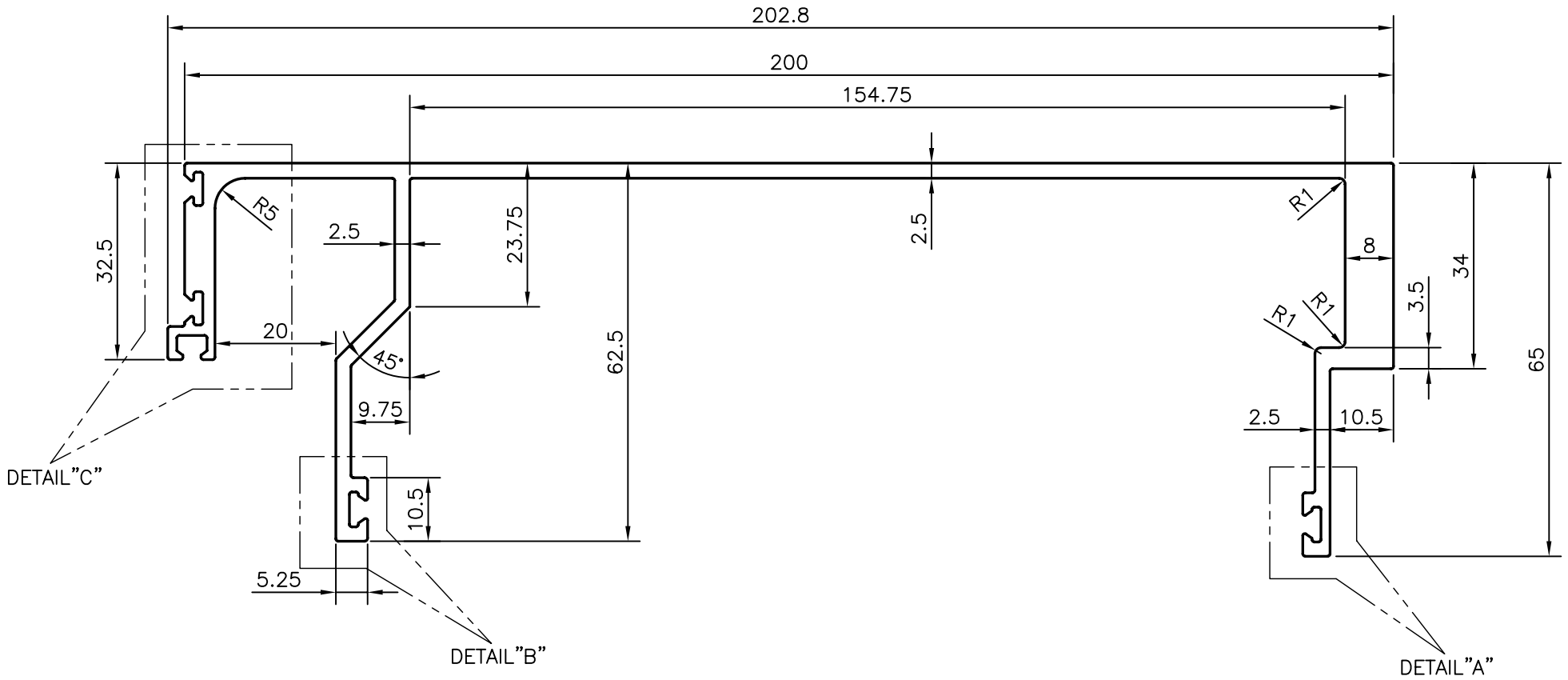

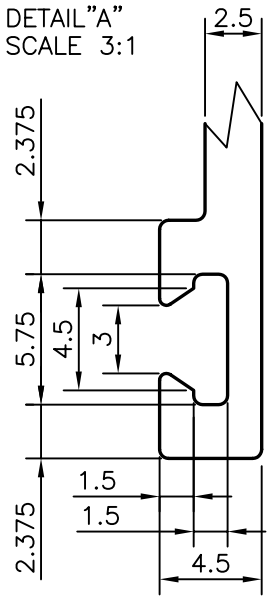

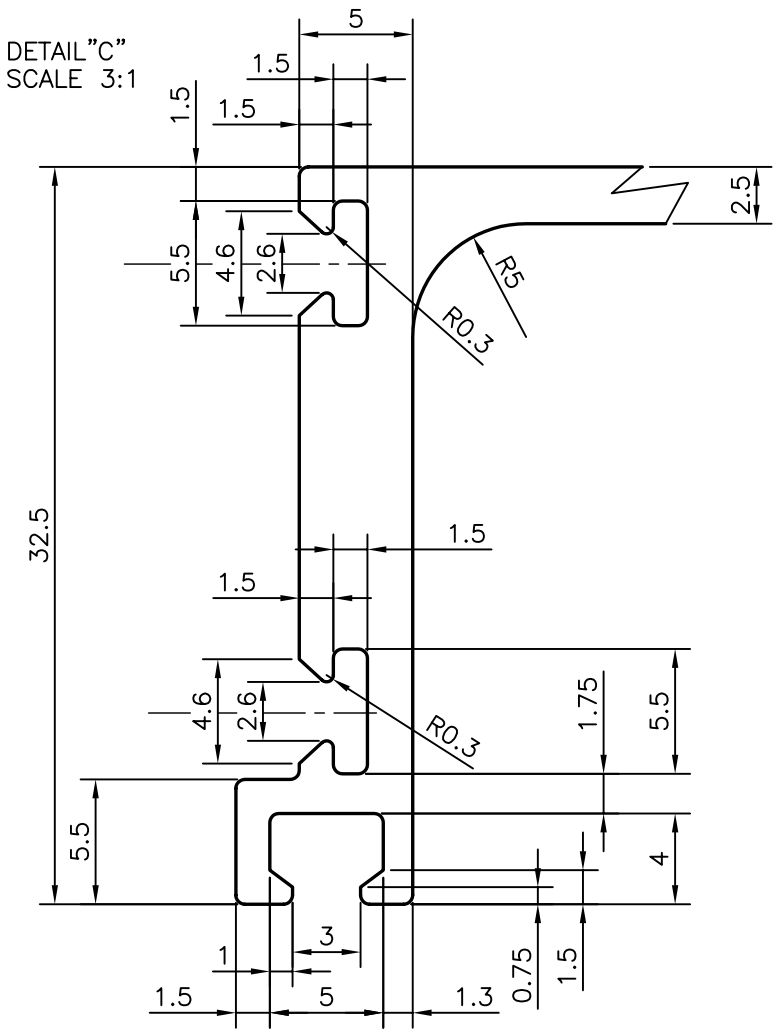

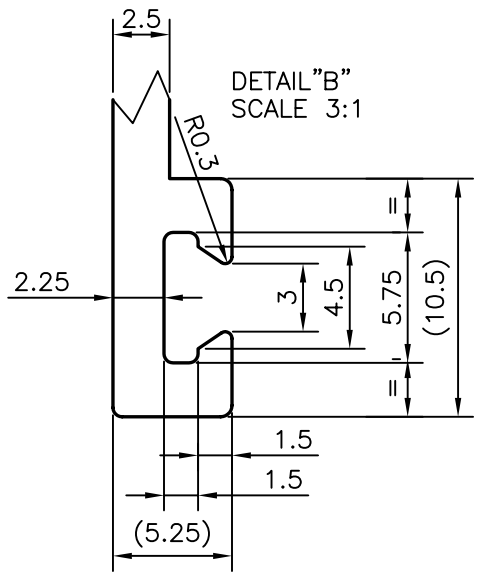

(EXCLUSIVE)

JINDAL SYMBOL OF QUALITY AN ISO 9001 COMPANY	*JINDAL ALUMINIUM LTD.* *BANGALORE–560073 (INDIA)*		NAME	DATE
		DRAWN	RAGHAVENDRA	01–11–2006
		CHECKED		
		APPROVED		
1. ALL DIMENSIONS ARE IN mm. 2. ROUND OFF ALL SHARP CORNERS WITH 0.40 mm. 3. TOLERANCES WILL BE AS PER IS:3965–1981 UNLESS OTHERWISE SPECIFIED		SCALE		1:1
		AREA mm^2		1155.968
		PERIMETER mm.		785.071
		WEIGHT kg/m		3.121
PARTY'S NAME	GWS FABRICATORS PVT. LTD., MUMBAI	DRAWING No.		SECTION No.
PARTY'S DRAWING No.	GWS–ST.GLAZING–DIE–01	P–6764–1		–
ALLOY & TEMPER	6063 T6	28909		28909
DESCRIPTION	ST. GLAZING MALE MULLION			