P–6766–1
28910

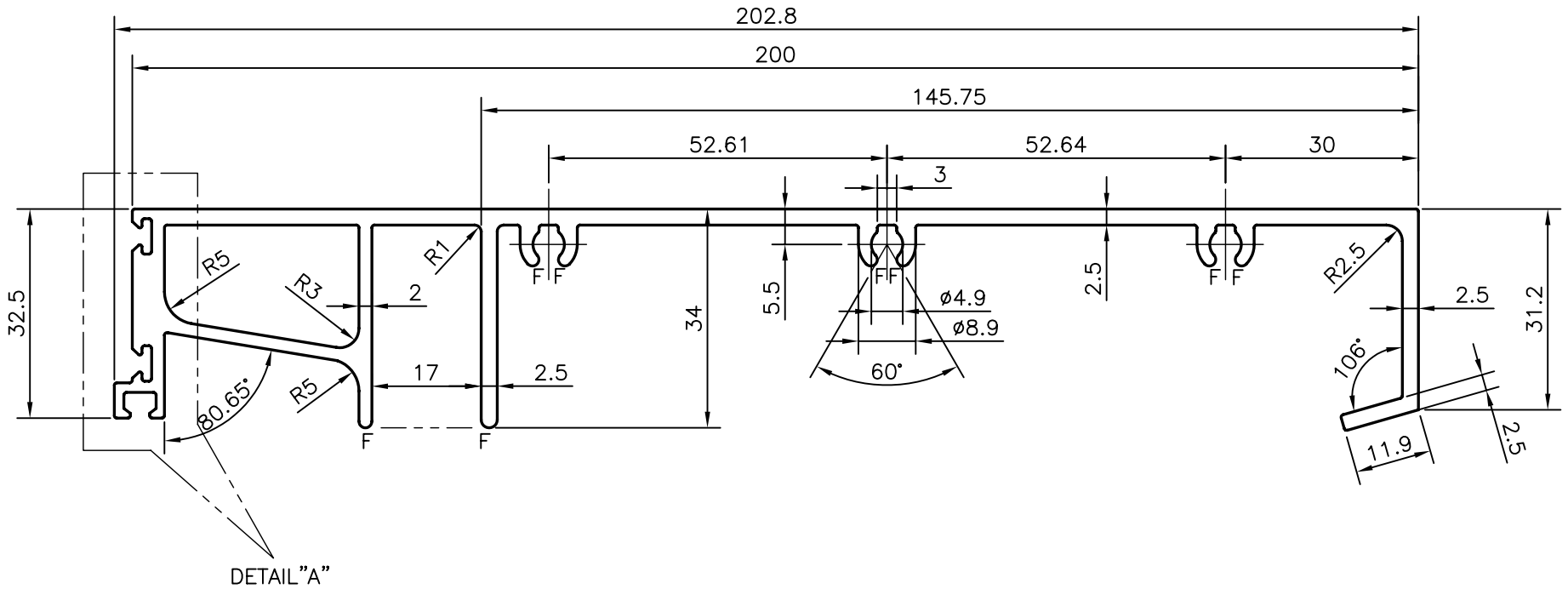

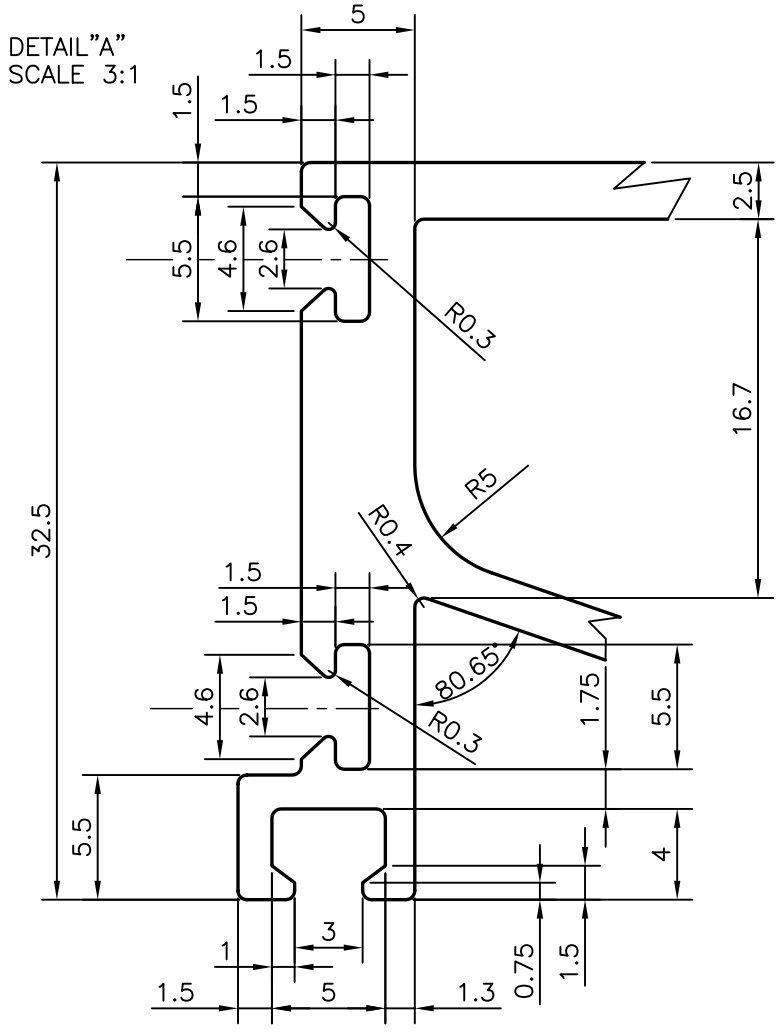

F = FULL RADIUS (8 PLACES)

(EXCLUSIVE)

			NAME	DATE
SYMBOL OF QUALITY AN ISO 9001 COMPANY	*JINDAL ALUMINIUM LTD.* *BANGALORE–560073 (INDIA)*	DRAWN	RAGHAVENDRA	01–11–2006
		CHECKED		
		APPROVED		
1. ALL DIMENSIONS ARE IN mm. 2. ROUND OFF ALL SHARP CORNERS WITH 0.40 mm. 3. TOLERANCES WILL BE AS PER IS:6477–1983 UNLESS OTHERWISE SPECIFIED		SCALE		1:1
		AREA mm^2		1018.036
		PERIMETER mm.		726.511
		WEIGHT kg/m		2.749
PARTY'S NAME	GWS FABRICATORS PVT. LTD., MUMBAI	DRAWING No.		SECTION No.
PARTY'S DRAWING No.	GWS–ST.GLAZING–DIE–04	P–6766–1		–
ALLOY & TEMPER	6063 T6	28910		28910
DESCRIPTION	ST. GLAZING SILL SECTION			