P-6772-1

28912

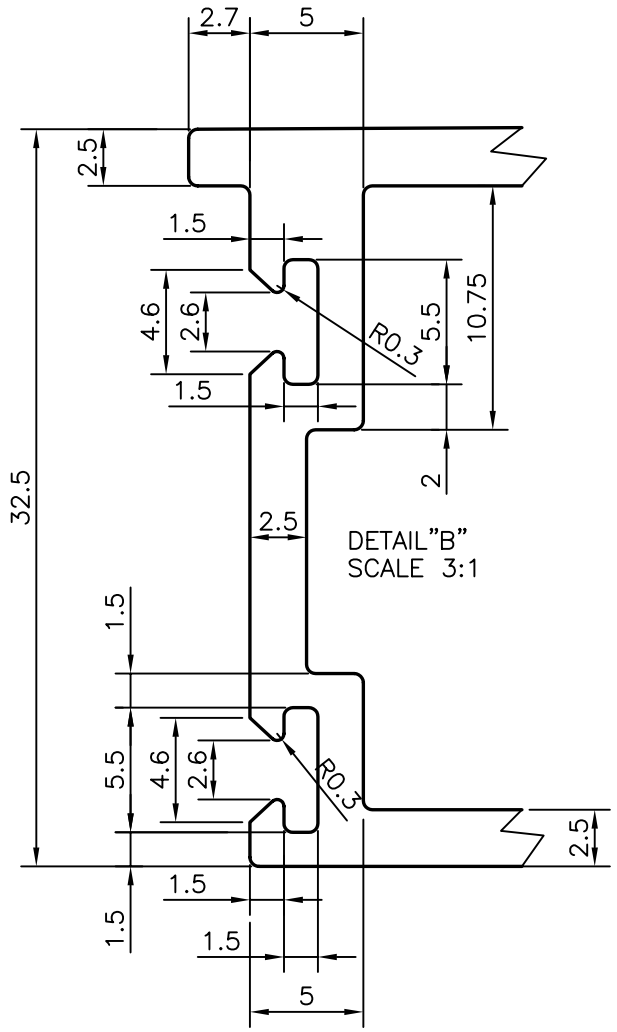

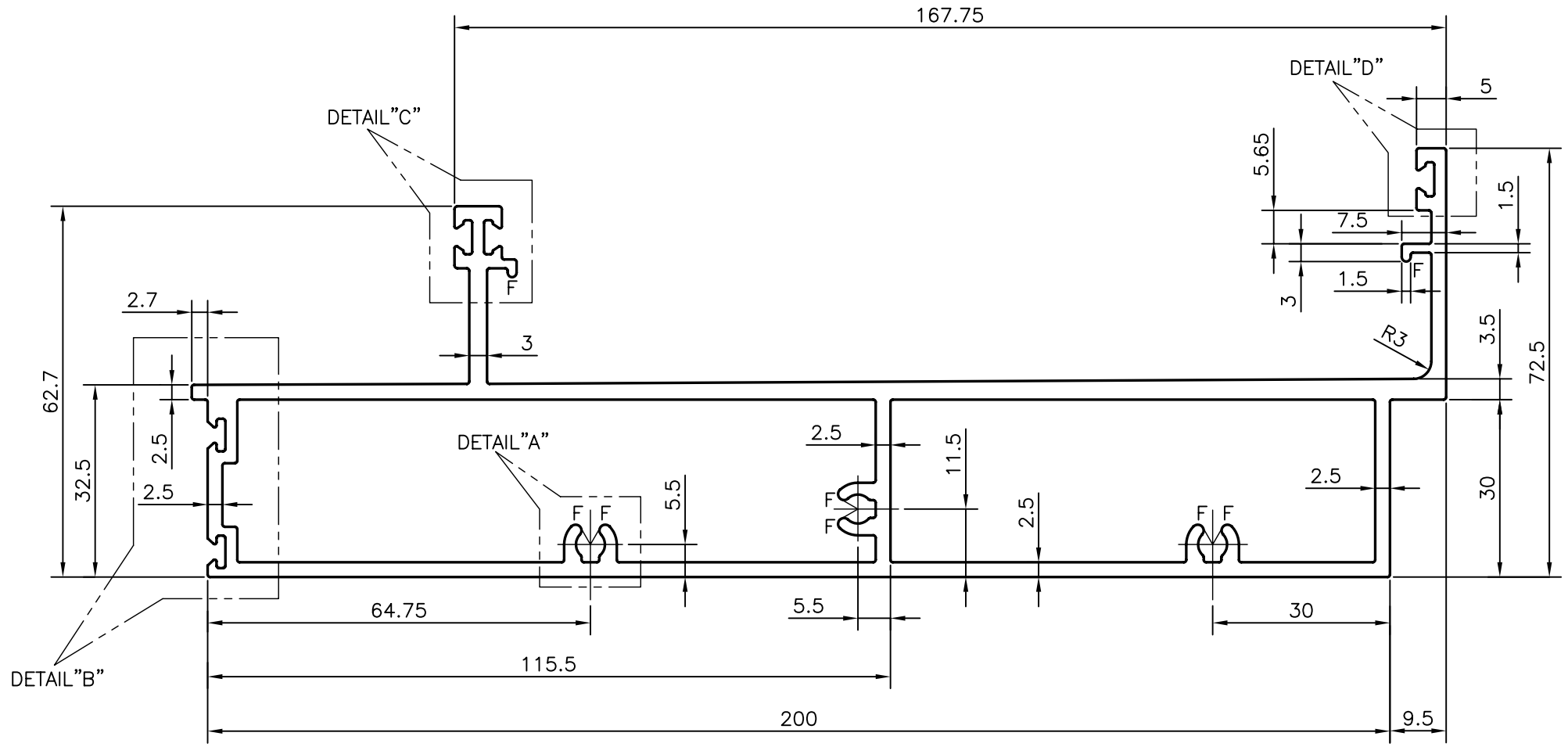

F = FULL RADIUS (8 PLACES)

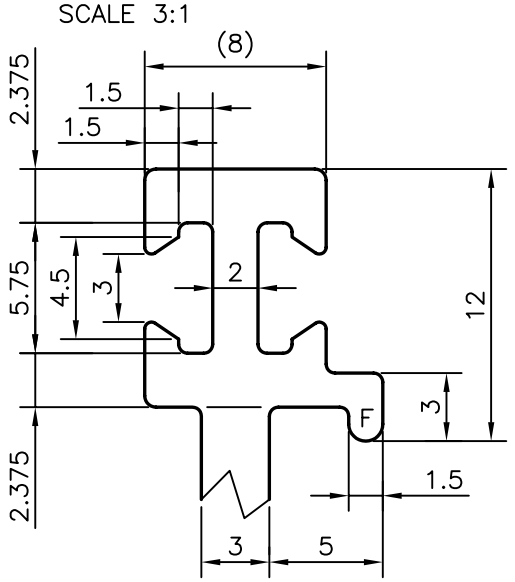

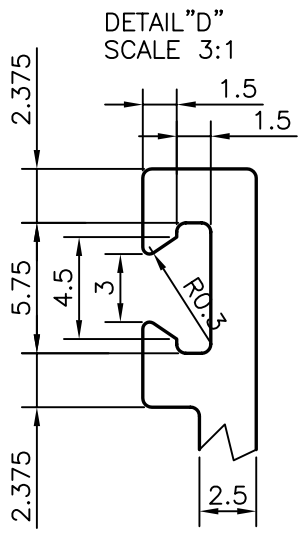

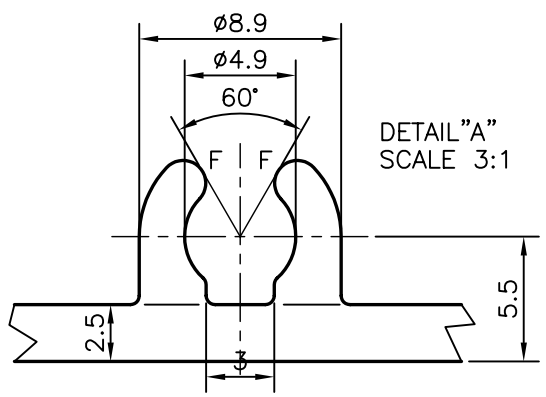

(EXCLUSIVE)

SYMBOL OF QUALITY
AN ISO 9001 COMPANY

JINDAL ALUMINIUM LTD.

BANGALORE-560073 (INDIA)

1. ALL DIMENSIONS ARE IN mm.
2. ROUND OFF ALL SHARP CORNERS WITH 0.40 mm.
3. TOLERANCES WILL BE AS PER IS:6477-1983 UNLESS OTHERWISE SPECIFIED

PARTY'S NAME	GWS FABRICATORS PVT. LTD., MUMBAI
PARTY'S DRAWING No.	GWS-ST.GLAZING-DIE-03
ALLOY & TEMPER	6063 T6
DESCRIPTION	ST. GLAZING GUTTER SECTION

	NAME	DATE
DRAWN	RAGHAVENDRA	02-11-2006
CHECKED		
APPROVED		

SCALE	1:1
AREA mm^2	1682.337
PERIMETER mm.	705.224
WEIGHT kg/m	4.542

DRAWING No.	SECTION No.
P-6772-1	–
28912	28912